Operation & Maintenance Manual

Fully Automatic Coach Lift

GNXA-C, GNXA-P, GNXA-V

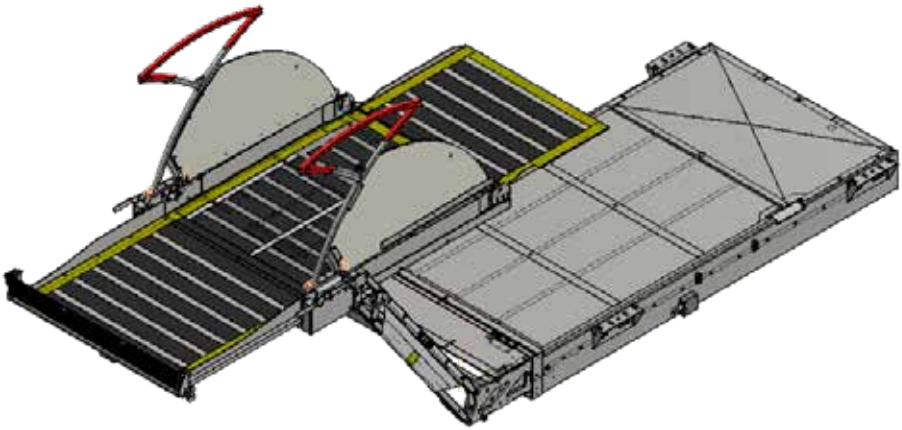

www.passengerliftsolutions.co.uk

Issue 2.0

November 2013

Written and compiled by: A. Beck B.Sc
CAD & Technical contributions by: P. Edwards, R. Kulins, A. Holmes & S. Wright

Section 1

IMPORTANT

The new lift owner/operator should refer to this manual for operating instructions, warranty and future servicing work. This manual should be kept safely for the entire working life of the lift.

When quoting the lift serial number to the manufacturers, this number can be found on the S.W.L. plate located on the carriage. The number is also stamped into the aluminium platform main section (near side).

1 Contents

GNXA Fully Automatic Coach Lift

Section

Contents

GNXA Fully Automatic Coach Lift

1 Warranty Terms & Conditions

GNXA Fully Automatic Coach Lift

Warranty Cover & Period

The PLS Warranty covers parts and labour, and is effective for 36 months from the date of initial commission by PLS or a certified authorised engineer.

If the date of initial commission is in excess of 90 days from date of dispatch, the warranty will start from the date of dispatch.

Procedure

To qualify for this warranty, it is necessary to register the Lift and Vehicle details on line www.passengerliftservices.co.uk or via post within 45 days of the initial LOLER inspection.

An operator requiring attention to a unit will contact PLS quoting the Lift serial number.

PLS will then instruct a company engineer, or an authorized approved Service Agent by issuing an official order number to affect the repair.

NB - ANY W ORK CARRIED OUT WITHOUT PLS AUTHORIZATION WILL NOT BE REIMBURSED.

Conditions

Warranty does not extend to lifts that have not been regularly serviced by a PLS engineer or factory trained and authorized engineer. This includes the 6 monthly LOLER inspection and separate weight test, which must be current at the date of the Warranty Claim.

All previous LOLER and Weight Test Certificates must have been copied to PLS and run concurrently.

The lift must be made available during the hours of 08.30 and 17.00, Monday to Friday, excluding public holidays.

No delivery costs or travel time will be reimbursed except by prior agreement and as specified on the original Purchase Order.

The initial Warranty period applies to original parts only.

Replacement parts changed under warranty and new parts that are purchased, carry 12 months warranty only.

New parts that have been purchased and require a warranty repair will require either a copy of the original Purchase Order or details of the original Purchase Order number to qualify.

The serial number(s) for the component claiming warranty must match the serial number(s) recorded to the lift it was originally fitted to.

If a customer has an invoice unpaid beyond PLS terms and conditions or is in dispute customers lift will not be visited.

Warranty Exclusions:

Hydraulic Powerpacks that are fitted to the exterior of the vehicle only carry 12 months warranty.

Hydraulic Powerpacks fitted to the interior of the vehicle qualify for the 24 months warranty.

The following are all excluded from warranty: Consumable parts e.g. Fuses, Bulbs, Electrical Connection, Hydraulic Hoses (with the exception of manufacturing defects).

Driver misuse.

Accident damage.

Items that are subject to the level of wear and tear which would normally involve replacement during normal service, maintenance and operating conditions.

Handsets carry 12 months warranty only.

Where a lift is fitted in a floor void, with Coach built floor above it and the floor interferes with the lift cassette. The cassette must always be easily fully removable for Service purposes.

No claim will be accepted for:

Replacement vehicle hire.

Loss of Earnings.

The Warranty Agreement does not supersede the Suppliers liability for all components as defined in the Sale of Goods Act 1982.

Months 24 to 36 of the Warranty:

The vehicle will be required to be returned to the PLS Factory for 'free of charge' warranty work.

When this is not possible, labour and travel will be charged at the current PLS hourly rate, weather it is a PLS engineer or an agent working on behalf of PLS Ltd that conducts the repair.

If an agent is used, it will be at the discretion of PLS Ltd as to who will affect the repair.

Any parts sent to an agent for warranty work within the 24-36 month period, will incur the relevant courier costs at commercial rates, and will be at the expense of the customer.

Extended Warranty:

Extended Warranty is available for months 37-60 with a written agreement of PLS Ltd, initiated BEFORE month 37 starts.

This warranty will follow the same basis as the 24-36 month period.

Extended Warranty does not include Powerpacks, motors, hydraulic cylinders and hoses.

Passenger Lift Solutions Limited
Unit 2, Summit Crescent Ind. Est., Off Roebuck Lane, Smethwick, West Midlands B66 1BT. U.K.

Tel: +44 (0)121 552 0660 Fax: +44 (0)121 552 0200 enquiries@pls-access.co.uk
www.passengerliftsolutions.co.uk

V2 06/11

Technical Data

1

GNXA Fully Automatic Coach Lift

The lift is designed to transport:

One person in a wheelchair with or without an attendant, with a size not larger than the width/length of platform space available, or weight over the stated badge capacity (300Kgs unless re-graded by PLS).

Or

Two walking passengers to the S.W.L. The operator should not attempt to transport more than two people at a time because of increased risk of passenger discomfort. The passengers also may require extra space for mobility devices such as walking sticks and frames.

Capacity:

Standard Lift = 300Kgs (350Kgs upgrade available)

Specifications:

Lift type	:Internal or external underfloor
Voltage	:24Volts standard (12Volts available)
Power system	:Electro-hydraulic pump.
Hydraulic fluid type	:PLS Blue (specific formulation)
Control	:Pendant via wanderlead
Stowage box size	:1945mm x 1000mm x 175mm
Bridge-plate width	:780mm (usable)
Platform width	:825mm
Platform length	:1740mm
Weight of lift (inc pump module)	:345Kgs
Working pressure	:190 Bar MAX
Max amp draw at pump	:35 amps
Safety systems	:Dead man button control
	:Platform roll-off barrier (ramp)
	:Bridging plate
	:Main power isolation switch
	:& or Driver isolation switch
	:Hose valves fitted inside cylinder body
	:Hydraulic hoses rated x 4
	:Stow position warning light (optional)

1 Safety Instructions

GNXA Fully Automatic Coach Lift

SAFETY INSTRUCTIONS

***IMPORTANT-** FAMILIARISE YOURSELF WITH CONTROLS AND SAFETY PROCEDURES **BEFORE** USING LIFT.*

TAIL LIFT SAFETY

Only an authorised operator must control the lift.

Secure the vehicle doors in the open position well clear of the platform.

Keep within the maximum safe working load.

Keep people away from the operating area (inside and outside the vehicle).

Ensure that the platform is level.

Switch off the isolator (if fitted) before leaving the lift unattended.

VEHICLE SAFETY

Do not operate the lift on a steep hill, camber or uneven ground.

Ensure that the vehicle handbrake is firmly applied.

Ensure that the platform is properly stowed after loading.

Do not move the vehicle with the platform lowered near the ground.

Do not move the vehicle with a person / load on the platform.

PEDESTRIAN PASSENGERS ENSURE THAT:-

- Passengers keep clear of the platform edges.
- They hold onto the hand rails.
- They do not climb onto the platform.
- They do not leave the platform before it reaches the floor or ground.

WHEELCHAIR PASSENGERS ENSURE THAT:-

- Operator is behind wheelchair.
- They are stable.
- They do not overhang the platform.
- Their handbrakes are applied.
- Electric wheelchairs – engage neutral.

INSIDE THE VEHICLE ENSURE THAT:-

- Wheelchairs are clamped to the floor.
- Seatbelts are used.

Safety Instructions for 'Scooters' and Large Powered Wheelchairs

Before operating tail lift:

Fully familiarize yourself with lift controls, relevant safety procedures and possible hazards, signified by warning labels or highlighted in your 'Operators Risk Assessment'.

Tail lift safety:

- Only an authorised (fully trained) operator must control the lift.
- Secure vehicle doors fully open, well clear of the lift platform.
- Keep within the stated maximum safe working load (SWL).
- Keep people away from the operating area (inside and outside of vehicle).
- Ensure that the platform is always level (horizontal, not more than 5º).
- NEVER leave the lift unattended at ground level if passengers are on board.
- When lift is not in use the controls should be deactivated.
- Ensure that the lift is correctly stowed after loading.

Operators ensure that:

- Lift will lower to firm, level ground.
- Scooter or powered wheelchair is not larger than lift platform in any direction.
- Tail lift is in a FULLY operational condition. Report any defects.
- Lift bridging-plate lands flat onto vehicle floor.
- Roll-off ramp is set vertically (approx. 80º), and fully operational.
- Accompany the passenger on the lift if possible, but do not overload the lift.
- You have a clear view of the lift platform before the scooter moves onto it.
- NEVER leave passengers unattended at any time.
- The passenger should not be required to operate ANY controls.

Loading & Unloading procedure:

- Explain to passenger the sequence of movements that will occur.
- Where possible passenger should dismount scooter and board vehicle separately.
- Ensure that the lift platform and area around the lift are free from obstruction.
- Ensure that the lift platform is in the correct position before moving onto it.
- Scooter should be pushed onto the lift platform, NOT DRIVEN.
- Ensure that persons or equipment do not overhang the platform.
- Scooter breaks are applied BEFORE lift begins motion (or wheels blocked).
- All power to scooter is turned OFF.
- Operate lift platform to vehicle floor.
- Scooter is pushed off the lift platform, NOT DRIVEN.
- The scooter should be clamped to the vehicle floor using the correct equipment.
- The passenger utilises the static vehicle seats and seatbelts.

Please note: The transportation of scooters and large powered wheelchairs may require a 'NON STANDARD' tail lift size or specification. Where possible PLS can provide longer, wider platforms, higher roll-off ramps and up-rated 350Kg systems to help combat the increased hazards related to larger passenger vehicle transportation.

GNX Lift & Magic Floor

OPERATION INSTRUCTIONS

These instructions MUST be read and understood before attempting to operate the lift and floor system.

TO DEPLOY THE LIFT & FLOOR:

1. Open the vehicle entrance door.
2. Turn on main isolation switch (by driver).
3. Power the Lift out of cassette by pressing the **'OUT / UP'** button. The Lift will travel to the fully **'OUT'** position when at this point the Magic floor automatically raises and reaches full travel. The Lift will then begin to rise. Once the full **'UP'** height has been achieved the platform extension will start to extend automatically.
4. During automatic platform extension the handrails will also lift automatically.
5. Now that the lift is fully extended press the 'DOWN / IN' button to lower to the ground and load passengers.

TO STOW THE LIFT & FLOOR:

1. Press the **'UP'** button until the lift is above the level of the cassette box height.
2. Now press the **'STOW & DOWN / IN'** buttons at the same time. The Platform will now retract and the handrails fold to the **HORIZONTAL** position. Keep both of buttons depressed until the platform is fully retracted, warning light will turn **OFF** when the platform is fully retracted.
3. By pressing the **'DOWN / IN'** button the lift will power down to it's stowage height then automatically divert power to the **'IN'** function to stow the lift in the back of its cassette box. At this time the Magic floor will descend to its (lower) position.
4. Turn off the main isolation switch.
5. Close the vehicle entrance door.

NOTE! DO <u>NOT</u> STAND IN FRONT OF THE LIFT WHEN OPERATING
DO NOT STOW THE PLATFORM WITH THE LIFT AT GROUND LEVEL.
DO NOT ATTEMPT TO RETRACT THE PLATFORM WITH PASSENGERS ON THE LIFT.
If in doubt please phone the company for further instructions. Tel: 0121 552 0660

GNXA Fully Automatic Coach Lift

GXN'tra & Magic Floor
AUXILIARY HAND PUMP
MANUAL OPERATION PROCEDURE

A hand pump allows the lift to be used in the event of any electrical fault. The unit which is integral with the powerpack comprises a single acting piston pump with removable operating lever. Remove the black plastic cover to gain access to the pump. To use the pump proceed as follows:

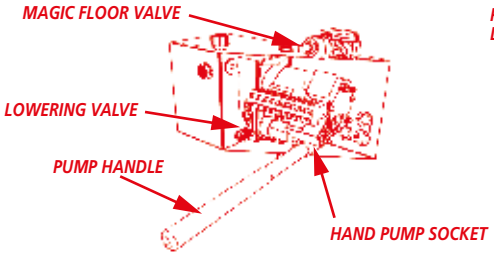

TO RAISE LIFT / MAGIC FLOOR AND EXTEND PLATFORM

1. Take the pump handle from its stowage position. Ensure the lift is fully deployed from the stowage box.
2. Connect the Pump Handle to the 'Hand-pump Socket'.
3. Operate the lever until the platform is at usable working height (Magic floor will raise first)
4. Pull OUT and turn 'Pressure Valve LH Side' (1/2 turn only)
5. Operate the lever until the platform has fully extended and handrails raised. Close the Valve.

TO LOWER THE PLATFORM

6. Turn the 'Lowering Valve' anti-clockwise (1/4 turn only) Controlling the speed by turning slowly.

TO RETRACT PLATFORM AND STOW LIFT / MAGIC FLOOR

7. Position the platform above the height of the stowage box.
8. Pull OUT and turn 'Tank Valve RH Side' (1/2 turn only). The platform will retract and handrails lower.
9. When the extension has fully retracted (Indicator light off), Close the Valve.
10. Pull OUT and turn 'Magic Floor Valve' (1/2 turn only).
11. Turn the 'Lowering Valve' anti-clockwise (1/4 turn only) Controlling the speed by turning slowly.
12. Lower the lift and Magic Floor until they both stop. Close both valves.
13. Stow the Pump Handle and push the lift into the back of the cassette. Ensure the lift is fully locked.

N.B. Should the power IN & OUT system fail, the lift can be pulled and pushed into the box by hand. To deploy Lift, raise the box cover and pull the box lock override handle located in the left hand corner. Ensure Hands / Arms are clear of platform when movement commences.

GNXA 'V'
AUXILIARY HAND PUMP
OPERATION PROCEDURE
(COMPACT PUMP)

A hand pump allows the lift to be used in the event of electrical failure. The unit which is integral with the powerpack comprises a single acting piston pump with removable operating lever. This is found either under the rear of the vehicle on the nearside or internally on the nearside rear. Remove the black plastic cover to gain access to the pump. To use the pump proceed as follows:

1. *Take the Hand Pump Lever from its stowage (Return when finished).*

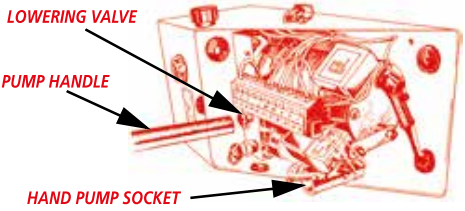

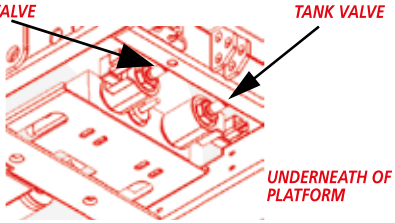

TO RAISE THE PLATFORM

2. *Connect the Pump Handle to the 'Hand-pump Socket'.*
3. *Operate the hand pump lever until the platform as reached its full working height.*

TO LOWER THE PLATFORM

4. *Turn the 'Lowering Valve' anti-clockwise (1/4 turn only) controlling the speed by turning slowly. Close the Valve.*

TO LOWER THE BRIDGE PLATE

5. *Ensue the lift is at full working height. Pull OUT and turn 'Tank Valve RH Side' (1/2 turn only).*
6. *Allow the bridge plate to lower fully on to floor. Close the Valve.*

TO RAISE THE BRIDGE PLATE

7. *Ensue the lift is at full working height. Pull OUT and turn 'Platform Valve LH Side' (1/2 turn only).*
8. *Operate the Hand Pump lever until the bridge plate as fully rasied and as stopped. Close the Valve.*

Note: Should the power IN & OUT system fail, the lift can be pulled and pushed into the box by hand. Ensure Hands / Arms are clear of platform when movement commences

Service Data

1

GNXA Fully Automatic Coach Lift

GNXA Fully Automatic Coach Lift Service Data Sheet

Date lift was first issued _____/_____/_____

Lift requires monthly checks and lubrication by driver/ operator.
Refer to Maintenance manual for instructions.
Every six month service and twelve monthly weight test should be carried out by an appointed service engineer.

Service 1 Date _____/_____/_____ Driver/ Operator Name Signature	**Service 2** Date _____/_____/_____ Driver/ Operator Name Signature	**Service 3** Date _____/_____/_____ Driver/ Operator Name Signature
Service 4 Date _____/_____/_____ Driver/ Operator Name Signature	**Service 5** Date _____/_____/_____ Driver/ Operator Name Signature	**Service 6** Date _____/_____/_____ Driver/ Operator Name Signature
Service 7 Date _____/_____/_____ Driver/ Operator Name Signature	**Service 8** Date _____/_____/_____ Driver/ Operator Name Signature	**Service 9** Date _____/_____/_____ Driver/ Operator Name Signature
Service 10 Date _____/_____/_____ Driver/ Operator Name Signature	**Service 11** Date _____/_____/_____ Driver/ Operator Name Signature	**Service 12** Date _____/_____/_____ Driver/ Operator Name Signature

This page MUST be produced when claiming warranty repairs

1 Monthly Safety Checks for Operators

GNXA Fully Automatic Coach Lift

Regular lift maintenance is recommended at MONTHLY intervals by the lift operating company. The working life of your lift will be greatly prolonged if these steps are adhered to.

This should include the following:

1. Check for obvious signs of damage, replace parts as necessary.

2. Check the operation and stowing of the lift, if the platform base is touching the bottom of the box adjust stow height (parts shown on page 1.13) by raising the N/S and O/S stowing bolts

3. Check box lock operation by trying to pull the lift out of the box with the lock engaged. If this can be achieved the lock requires adjustment (see pages 2.08 - 2.10).

4. Check the carriage lock (parts shown on pages 2.08 - 2.10 item 13) operation by attempting to push the lift back into the box once the platform has been fully deployed. If this can be achieved the carriage lock mechanism will require adjustment.

5. Check the rear roll-off-ramp operation. Check ramp 'dummy pin', which holds ramp in vertical position whilst lift is stowed. Lubricate roll-off pivots with silicone spray.

6. Check bridging plate operation (parts shown on pages 2.05 - 2.07) see pages 1.19 - 1.22 for full adjustment instructions. When the lift powers out of the cassette the bridging plate should unfold automatically, if this is not the case, the 'torsion spring' will require replacing!

7. Check platform extension operation and security / alignment of alloy sheet.

8. Check handrail operation and security. If the top of the handrails are corroded, they should be replaced due to potential hazard to users! Check location pivot pins (pages 2.12 & 2.13) and all fasteners. If components show signs of wear they should be replaced immediately.

9. Check the platforms non-slip surface, replace cleating where necessary.

10. When cleaning the vehicle wash the working platform of the lift.

11. Lubricate lift in accordance with 'Lubrication Diagram' pages 1.23 & 1.24.

12. Check Up/Down pump for fluid leaks and loose/corroded electrics. Top up reservoir (with lift at ground position) with PLS Blue hydraulic oil. Do NOT overfill. Coat any exposed electrics with dielectric grease (or similar) to protect.

IF IN DOUBT CONTACT THE MANUFACTURER.

Maintenance 6 Monthly

1

GNXA Fully Automatic Coach Lift

For appointed Service Engineers.

As monthly safety checks plus:

1. Check arm pivot pins, bushes, bearings and retaining grub screws (page 2.11).

2. Check cylinder rod clevis and grub screws (page 2.11 item 4).

3. Check cylinders for oil leaks. (page 1.13) Replace piston seal if excessive oil leaking from the cylinder.

4. Remove bottom sheet, check all hoses and fittings for leaks, wear or perishing. When bottom sheet is replaced remember to position retaining bolts with the nuts on the OUTSIDE of stowage box.

5. Check guide bearings, cam followers and carriage mechanisms (pages 2.08 - 2.10 & 2.11).

6. With the lift fully powered out, and the bottom sheet removed: Clean the interior of the stowage cassette and degrease the side tracks and guide racks with solvent. DO NOT GREASE TRACKS OR CENTRE GUIDE, USE SILICONE SPRAY ONLY.

7. Check the UMBILICAL (main hydro/electrical cable between carriage and inside of box) for signs of wear, if split or damaged this must be replaced! NOTE: Umbilical should not be twisted.

8. Check platform wear strips (on underside of platform extension surface) for wear, or 'fastening protrusion' replace if necessary.

9. Check bridging plate for correct operation. The bridging plate must land flush with the vehicle floor and NOT form a trip hazard. For full adjustment of the mechanism see pages 1.19 – 1.20 & 1.12 – 1.22.

10. Check that the platform does not have a side-to-side 'kick'. If a 'kick' is present the lifting cylinders should be adjusted (page 1.13).

11. Check that the lift mounting brackets and track bolts are tight / secure and free from damage. Corrosion in this area of the lift is likely to occur, however if in an advanced state components should be exchanged for new items.

12. Check manual hand pump operation (see page 9), lubricate all pivot points. REMEMBER TO RETURN ANY MANUAL OVERRIDE TAPS TO THEIR CLOSED POSITION.

13. Check condition and security of arm side guards (pages 2.12 – 2.13), replace if damaged.

14. Check right hand arm hose tray, check hose and cable condition and all cable ties are in place correctly.

15. Check the handset wiring by powering the lift whilst manipulating the cable in any direction.

IF IN DOUBT CONTACT THE MANUFACTURER.

1 Trouble Shooting

GNXA Fully Automatic Coach Lift

Symptom	Possible Cause	Solution
Lift will not come out of box	Circuit breaker tripped or blade fuse blown	Re-set circuit breaker (push button in) situated on vehicle or replace fuse
	Handset button failure.	Check wiring inside handset or change module.
	Box lock not fully disengaged.	Make sure lock handle is fully up, and lock-pin is free of hook.
	Lift is powered up inside box.	Press 'DOWN' on handset to lower lift or open the down valve to release pressure.
	Motor not working or slipping	Check wiring connections, plugs and pins also check pinion location pin, which may have slipped out and jammed into rack.
	Box lock actuator failure	Check wiring connections, actuator and fuse.
	Stow / lock relay failure	Check wiring connections and fuse, replace Relay unit located in hydraulic pump
	Box lock Switch not operating or failure	Check arm is operating switch and readjust or replace part
Lift fails to power UP	Circuit breaker tripped or blade fuse blown	Re-set circuit breaker (push button in) situated on vehicle battery or Replace fuse.
	Handset button failure.	Check wiring inside handset or change module.
	Hose burst.	Check for leaking oil, replace necessary components.
	Low oil level in reservoir draws air into system.	Top up reservoir with PLS BLUE hydraulic oil.
	Change over switch not set.	Re-set switch mounted on carriage which changes the OUT motion to UP.
	Carriage lock is jammed/stuck	Check pivot bolt, re-tighten and lubricate. Check carriage switch setting.
Lift fails to power DOWN	Crash valves blocked	Remove, clean and re-fit. Replace whole set if problem persist.
	Lowering valve blocked.	Remove, clean and re-fit.
	Handset button failure.	Check wiring inside handset or change module.
Lift fails to power IN	Circuit breaker tripped.	Re-set circuit breaker (push button in) situated on vehicle battery.
	Handset button failure.	Check wiring inside handset or change module.
	Carriage lock switch not set.	Re-set switch mounted on carriage lock which changes the DOWN motion to IN.
	Carriage lock not disengaging.	Make sure platform extension is fully home. Make sure platform is stowed correctly.
	Motor not working or slipping	Check wiring connections, plugs and pins also check pinion location pin which may have slipped out and jammed into rack.
	Extension switch not operating	Check extension is fully powering in and switch is being pressed. Readjust switch packing washers.

Trouble Shooting 1

GNXA Fully Automatic Coach Lift

Extension will not extend	Handrail mechanism damaged and not lifting	Check Handrail mechanism
	Extension control pressure valve not operating	Check electrical connections and manual override / replace whole assembly
	Extension control sequence valve not set correctly	Readjust sequence valve
	Extension cylinder leaking or low oil	Check hydraulic connections and top up reservoir with PLS BLUE hydraulic oil
Extension will not retract fully	Roll-off ramp hose catching.	Reposition hose/pipe.
	Extension legs are hitting rocker, or stow pegs.	Move lift platform to a higher position before attempting to stow.
	Extension Spring too loose	Readjust spring tension
	Extension Gas Spring not pulling straight or damaged	Readjust alignment or change part
	Extension control tank valve not operating	Check electrical connections and manual override / replace whole assembly
	Extension control Flow valve too slow or blocked	Readjust flow valve / replace whole assembly
Roll-off ramp not reaching floor. NOTE: Keep finger on down button	Lack of lubrication.	Spray all pivots and moving parts with silicone.
	Ramp damaged or bent.	Replace damaged parts.
	Roll-off cylinder failure.	Bleed the hydraulics at the cylinder. If cylinder is leaking fluid, replace seals, or whole cylinder.
Bridging plate not dropping to vehicle floor.	Lift not raised to max up position.	Power lift UP fully to floor height.
	Mechanism requires adjusting.	Re-set and test bridge plate mechanism.
	Alloy is damaged.	Replace damaged components.
Bridging plate not returning to vertical position.	Mechanism requires adjusting.	Re-set and test bridge plate mechanism.
	Spring compression	Increase spring compression by 5mm
Handrails will not lift	Cam rollers damaged	Replace handrail cam follower
	Cam plate damaged	Replace damaged parts.
	Rod ends out of adjustment	Readjust rod ends
	Platform rollers loose or missing	Replace parts
Handrails will not lower	Handrail locks not disengaging	Handrail lock grub screw to tight
	Dampers set too hard or out of sequence	Readjust handrail dampers
	Dampers springs failure / missing	Replace parts.
	Lack of lubrication.	Spray all pivots and moving parts with silicone.

1 Floor Height Adjustment

GNXA Fully Automatic Coach Lift

Floor height adjustment of platform
(also vertical stowing position on rear of vehicle)

Should it be necessary to adjust the lift to vehicle floor height, or if an imbalance of cylinder stroke requires adjustment, the following steps should be taken:

1) Remove the side guards, retained with cap headed bolts.

2) Undo the lock nut (A) at cylinder ends.

3) With the lift powered down to the floor (i.e. pressure off the hydraulic system) turn the pistons anti-clockwise to increase the lift height or clockwise to decrease the lift height.

4) Power the lift up to floor height and put the platform in it's vertical position. Final adjustment to correct a cylinder imbalance is carried out in the same manner.

5) Re-tighten lock nuts and refit arm guards.

N.B. Under no circumstances should the thread be unscrewed more than 30mm as insufficient thread will be left in the cylinder end resulting in possible damage to cylinder, lift and personnel. Should it be necessary to extend beyond this point please refer to our technical department.

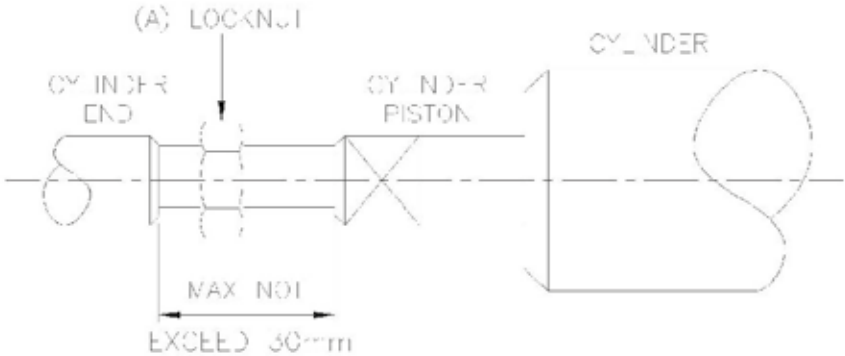

Handrail Adjustment

1

Should it be necessary to adjust or replace handrail components the following steps should be taken. PLEASE NOTE THAT THE SPEED OF THE PLATFORM EXTENSION MUST BE SET AT 6 SECONDS TO ADJUST THE HANDRAILS CORRECTLY. This is adjusted via the 'extension control valve which is the alloy block located inside the right front of the main platform (pages 2.05 & 2.06 item 7) If handrails are NOT adjusted by a PLS qualified Engineer the lift warranty will be invalidated:

Notes:

Always set the RIGHT side handrail first. This side is more critical then the LEFT because it must be at least 50% folded DOWN before the LEFT side STARTS to descend.

1. Please refer to **'fig H-A'** which depicts the required angle of the handrails when the platform is extended. The handrails should ALWAYS be MIN **1 degree** and MAX **2 degrees** from the vertical position, leaning TOWARDS the middle of the platform.

2. Before attempting to adjust the handrails, loosen off the **4** locking **'grub screws'** shown in **'fig H-B & H-C'**.

3. The angle and position of the handrail is set by the length of the 'double rose joint assembly' shown in **'fig H-C'**. Please note that the LEFT side ONLY has a locking nut to minimise slack, the RIGHT side has enough thread depth so is not required.

4. The MALE rose joints (bottom) are retained via circlips, these should be removed to adjust the centre length. If the rose joints are too LONG the handrail will be vertical or OVER vertical, if too SHORT the handrails will lean into the platform impeding wheelchair entrance.

5. With the rose joint assembly set (right side first), and the platform extension EXTENDED, the vertical locking grub screw can be adjusted up to the handrail base **'fig H-B'**. The grub screws are stainless steel M8 and require a 4mm Allen key. They DO NOT have a locking nut and should be secured with MEDIUM strength 'threadlock' glue! Screw the grubscrew up to the handrail base to remove 'play' from the handrail. If the rose joint assembly slackens this screw will ensure that the system is not overstressed.

6. With the handrails still in the vertical position the SECOND locking grub screw can now be set **'fig H-C'**.

7. Ensure that the mechanical handrail lock is fully engaged (positioned behind the handrail prohibiting its descent). The grub screw can now be adjusted up to the outside of the handrail base to remove 'play' from the system. DO NOT OVER-TIGHTEN or the handrail lock will NOT automatically release, and allow the handrail to lower! The handrail lock is shown in 'fig H-E' in UNLOCKED position.

THE LEFT HANDRAIL CAN NOW BE SET FOLLOWING THE SAME PROCEDURE.

1 Handrail Adjustment Notes

GNXA Fully Automatic Coach Lift

a) When handrails are set correctly there should be 5 to 10mm of free-play in the TOP of the rails. If too tight the mechanism will 'lock-up'.

b) The RIGHT side, handrail is critical, when setting the DOWN speed, the handrail should match the profile of the stainless steel platform extension side plate. The LEFT side handrail can afford to be lowered SLOWER, to allow the RIGHT side to clear. Also when changing control options to the IN function these extra seconds can be used to fully ensure the LEFT side is settled BEFORE powering platform IN to the stowage box.

c) When BOTH handrails are in the HORIZONTAL position across the platform **(fig H-D)**, there should be no STRAIN in the rose-joint assembly's! If the rose-joints are set too long the handrails will be pushing into the platform and will damage the rubber/paint coating. If the rose-joints are set too SHORT the handrails will NOT lie flat, but point UPWARDS and will impede on the bridging plate alloy and box 'dummy rails', when the lift is stowed into box.

d) Please note Fig H-E and H-F. On STANDARD lifts a SPRING is fitted to control the DOWN speed of the handrails (left & right side). The Spring cannot be adjusted however should be checked for resistance and fitment at the 6 monthly service interval, replace if required. Some lifts are fitted with DAMPENERS in addition to the springs to aid extra control when lowering the handrails (see Fig H-F). The left and right side dampeners are the same component, however set to different resistance settings. To adjust the dampeners remove fully from the handrail assembly, hold the dampener with the large diameter body at the BOTTOM and inner rod at the TOP, PULL the inner rod FULLY OUT and turn RIGHT (clockwise) to INCREASE resistance. The LEFT side dampener should be set approx. 20% STRONGER than the RIGHT side!
Note: If 'dampeners' are NOT installed they can be retro-fitted by a PLS qualified Engineer, please call PLS Technical Assistance for advice (the mounting brackets will also require exchanging). Do not attempt to install or adjust dampeners by none qualified PLS Engineers, any adjustment may invalidate factory warranty.

e) The RIGHT handrail incorporates a RUBBER WHEEL which eliminates drag when the handrail is flat across the platform surface, and still retracting/extending. The wheel MUST be a larger diameter than the handrail to stop 'abrasion' of the handrail rubber coating. This wheel will wear down over time and should be replaced.

GNXA Fully Automatic Coach Lift

f) **WHEN MECHANICALLY OVERRIDING THE HANDRAILS ALWAYS FOLD THE RIGHT SIDE FIRST! FAILURE TO DO THIS WILL RESULT IN THE LEFT HANDRAIL TRYING TO LIFT BOTH HANDRAILS AT THE SAME TIME!**

g) The Black rubber 'stowage stop' fitted to the LEFT handrail is to help ensure that under 'manual override conditions' the RIGHT side is always lowered FIRST. The 'stowage stop' ensures that the RIGHT handrail will NOT fold OVER the LEFT handrail. **ENSURE THAT THE STOWAGE STOP IS ALWAYS CORRECTLY FITTED TO THE HANDRAIL IF REPLACING THE LEFT SIDE!**

Handrail Adjustment for GNXA PLX & SC

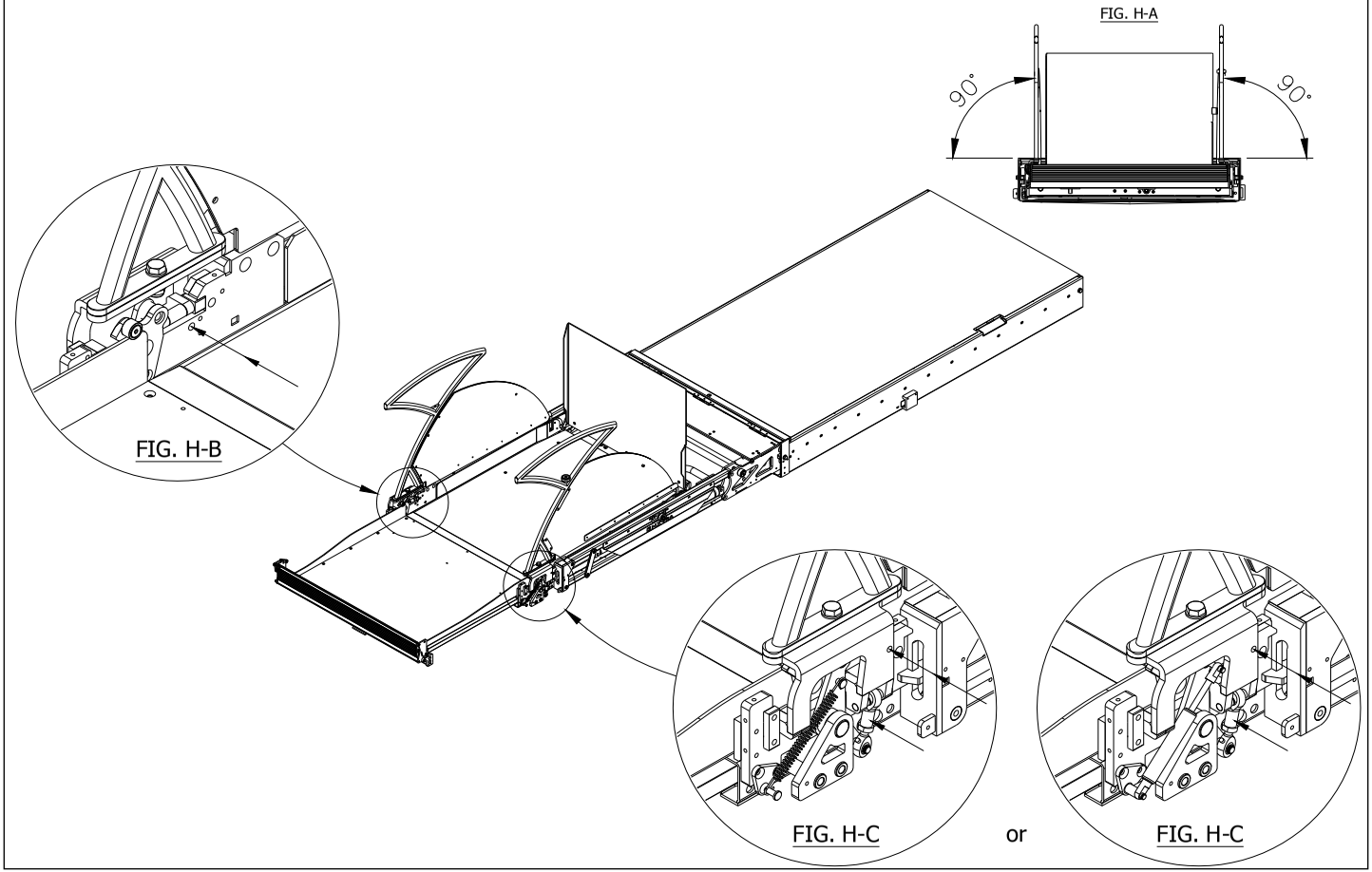

Handrail Adjustment for GNXA PLX & SC

FIG. H-D

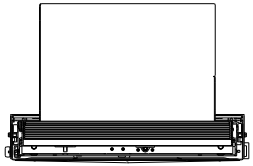

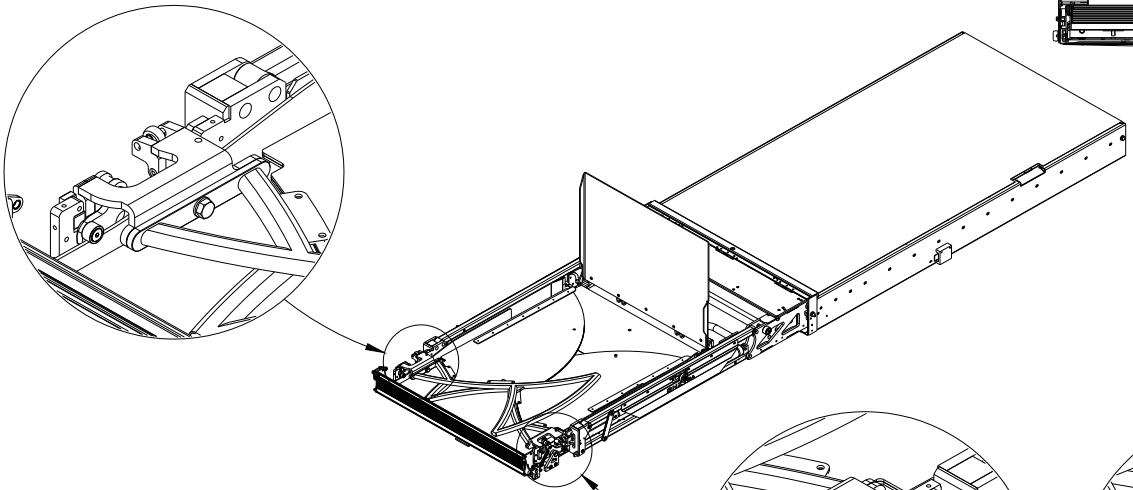

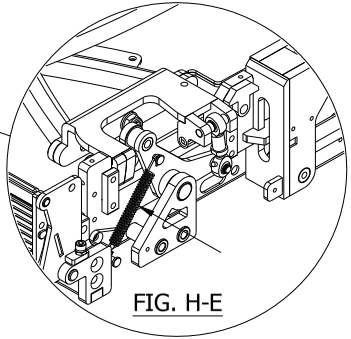

FIG. H-E

or

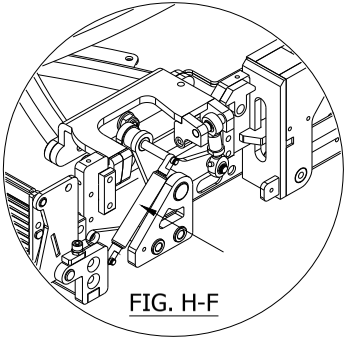

FIG. H-F

1 Bridge Plate Crank Adjustment

GNXA Fully Automatic Coach Lift

The Bridge Plate Crank (page 21) is an adjustable assembly which transfers rotary force from the Lift Arms to a linear force when operating the Bridge Plate at a predetermined floor Height. This will require readjusting if the Lift floor height is changed (see floor height adjustment) or during Lift maintenance.

THE BRIDGE PLATE CRANK SHOULD ONLY BE ADJUSTED BY PLS QUALIFIED ENGINEERS.

1. To remove the Cam & Crank Loosen off the M8 adjustable Bolt (BC1) and M6 grub screws (BC-2) until the Bridge Plate Push Rod is fully extended and stopped on the collars (Bridge Plate should be vertical). Ensure no spring force remains on Crank.

2. Remove the Crank Pivot Plate (BC-3) from the Platform. Push the Cam towards the middle of the Platform and pull the Crank from down from the Platform. Remove the Cam if necessary.

3. To replace the crank insert the Crank 8mm peg (BC-4) into the Arm (BC-5) at the same time you fit the Crank into the Platform. Check the Crank is the correct hand. Fasten the Crank in by using the Crank Pivot block. Pull the Cam into the Crank Boss until it is fully engage. Tighten the M6 Grub screw and check for excessive play.

4. The Crank pushes against the Cam when the Lift powers UP and the timing of this is controlled by the M8 Bolt. If twin Cranks are used then both push rods will need to be balanced by using this bolt

5. Wind the M8 bolt clockwise to operate the bridge plate Earlier

6. Wind the M8 bolt Anti-clockwise to operate the bridge plate Later

7. Ensure the Bridge is working correctly and there is a min gap of 3-5mm between the Bridge plate Roller and Push Rod. Lock the M8 bolt and ensure lock tight fluid is used.

Notes:

a) Do not set the bridge Plate Crank before resetting the Floor height higher.
b) Two types of Cranks are required for lifts with High floor Heights and Lower floor Heights
c) Always leave at least 5mm thread between Crank and Cam for the M8 Bolt.
d) Do not allow M8 bolt to protrude more 15mm from Adjustable Cam (BC6) and Change size if necessary.
e) Do not Bottom out Push Rod on Platform (BC7)

Bridge Plate Crank Adjustment for GNXA PLX & SC

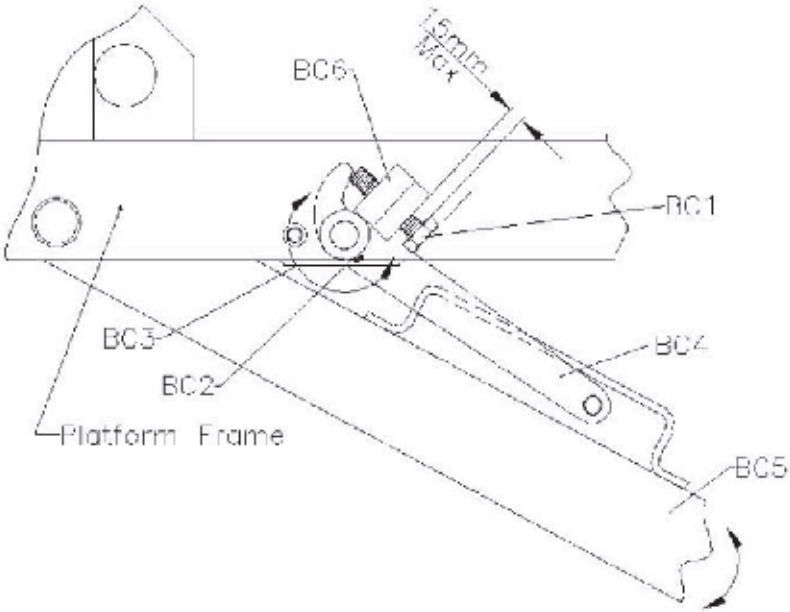

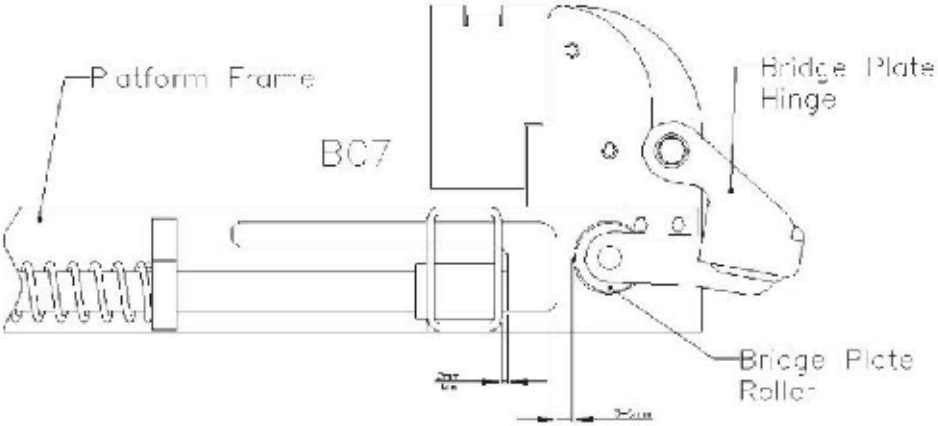

1 Bridge Plate Hinge Adjustment

GNXA Fully Automatic Coach Lift

The Bridge Plate Hinge (page 1.22) is operated by a mechanism located inside the Platform. It works with conjunction with the Cam and Crank that pushes a Rocker Bar BH-8 connected to a toggle joint. This pulls a spring loaded push rod allowing the Bridge Plate Hinge to lower on its own weight when the lift has reached floor height. This may need to be adjusted after changing a Bridge Plate or during Lift maintenance.

THE BRIDGE PLATE HINGE SHOULD ONLY BE ADJUSTED BY PLS QUALIFIED ENGINEERS.

1. To readjust the Bridge Plate Hinge Lower the Lift above stow (Bridge Plate vertical) loosen the M6 grub screw (BH-1) & M5 grub screw (BH-2)

2. Check the Thread length of the Toggle (BH-3) on the Push Rod (BH-4). This should be around 15mm. Readjust by loosening the N8 lock nut and set this to the required dimension.

3. With the bridge plate in the vertical position and resting above the flat section on the Push Rod. Set the very end of the Push Rod flush the Bridge Plate Roller Pin (BH-5).

4. Tighten the M6 grub screw (BH-2) and set a gap of 25mm between the Spring Collar (BH-6) and Toggle Collar (BH-7). Tighten the M5 grub screw. This will set the required amount of force to push the Bridge Plate up when the Lift lowers.

5. Power the Lift up and down to check the operation and check all fasteners are tight.

Notes:

a) Ensure the Bridge Plate angles down towards the vehicle floor. Platform should be 20-25mm above floor (see floor height adjustment)

b) To increase spring force, increase the gap of 25mm but please check that the spring does not bottom out when the lift is powered to floor height.

c) Lifts may vary with Single, Double or Quad Push Rods depending on lift type.

d) Ensure there is a 3-5mm gap between Bridge Plate Roller and Push Rod when Bridge Plate is resting on Floor (see crank adjustment)

e) The Bridge Plate Springs should be lubricated with copper anti-seized lubricant.

Bridge Plate Hinge Adjustment for GNXA PLX & SC

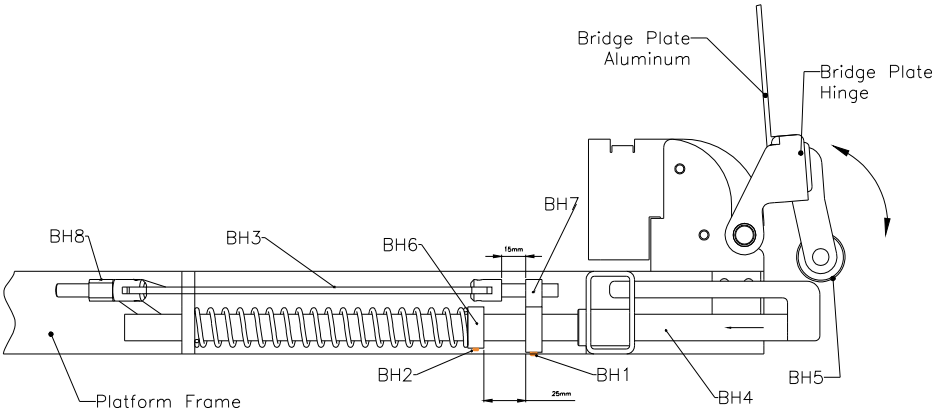

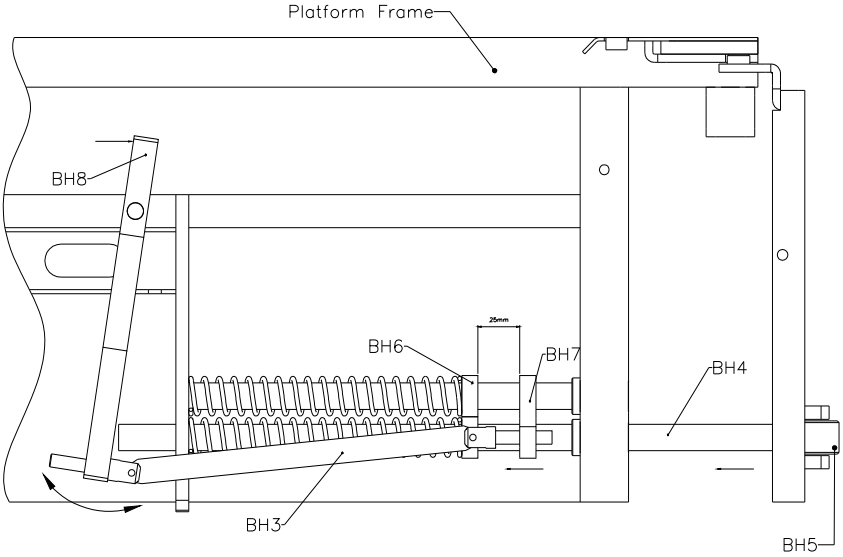

Lubrication Diagram for GNXA PLX & SC

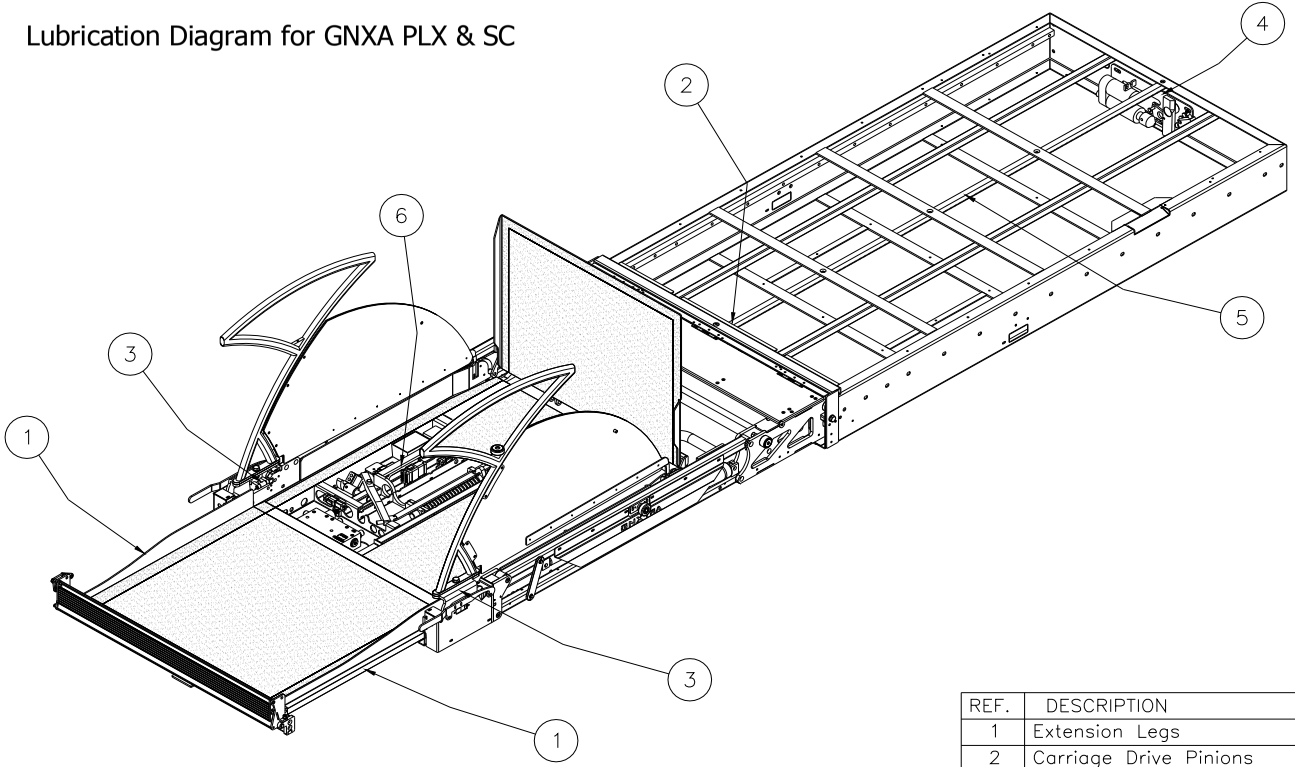

REF.	DESCRIPTION	TYPE
1	Extension Legs	A
2	Carriage Drive Pinions	C
3	Handrail Bases/Mechanism	A
4	Box Lock Assembly	C
5	Centre Rack	A
6	Bridge Plate Mechanism	B
	GENERAL :–	
	ALL SPRINGS	B

TYPE	LUBRICATION SPECIFICATION
A	SILICONE HEAVY DUTY SILICONE SPRAY TYPE 40
B	COPPER SLIP – CU800
C	LITHIUM GREASE EP 2

Lubrication Diagram for GNXA-V Lift

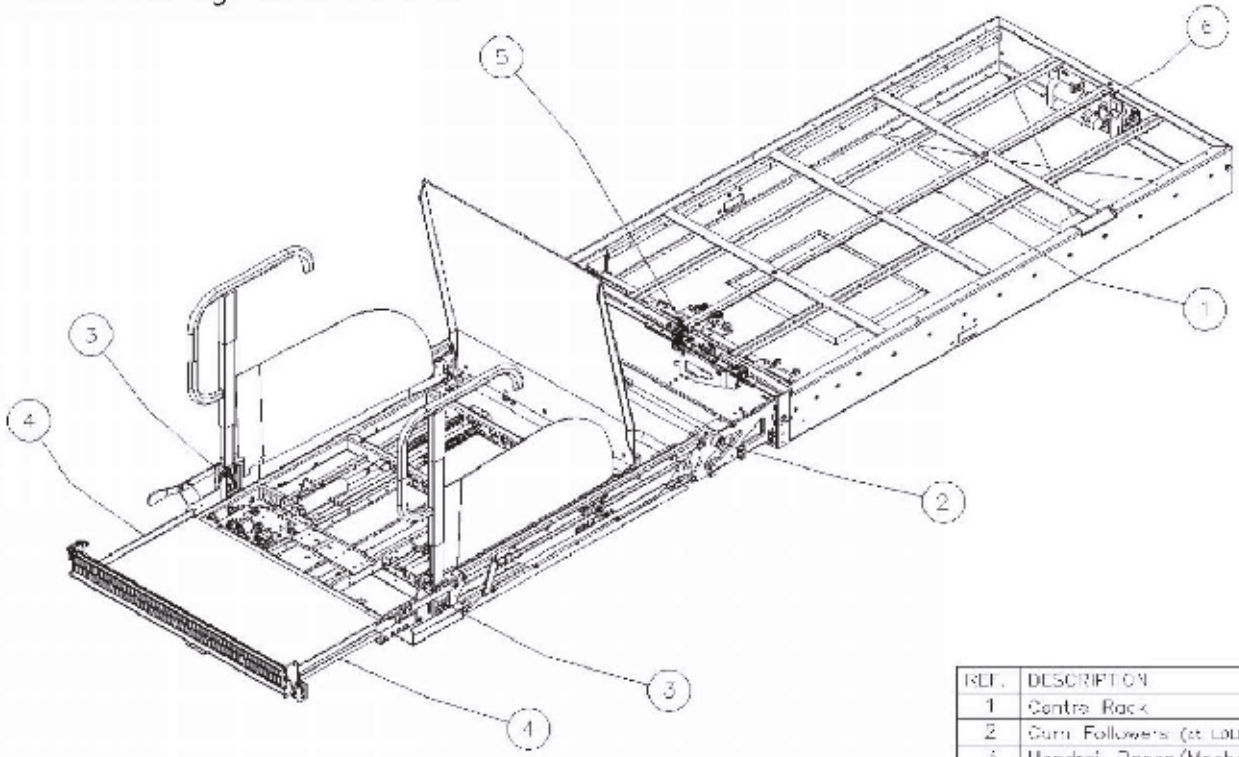

TYPE	LUBRICATION SPECIFICATION
A	SILICONE HEAVY DUTY SILICONE SPRAY TYPE 4C
B	LITHIUM GREASE EP 2

REF.	DESCRIPTION	TYPE
1	Centre Rack	A
2	Cam Followers (at LOLER test)	B
3	Handrail Bases/Mechanism	A
4	Extension Legs	A
5	Carriage Drive Pinions	B
6	Box Lock Assembly	B
	GENERAL :-	
	ALL SPRINGS	A

Ordering spare parts (drawings)

Section 2

Lift Layout for GNXA PLX & SC

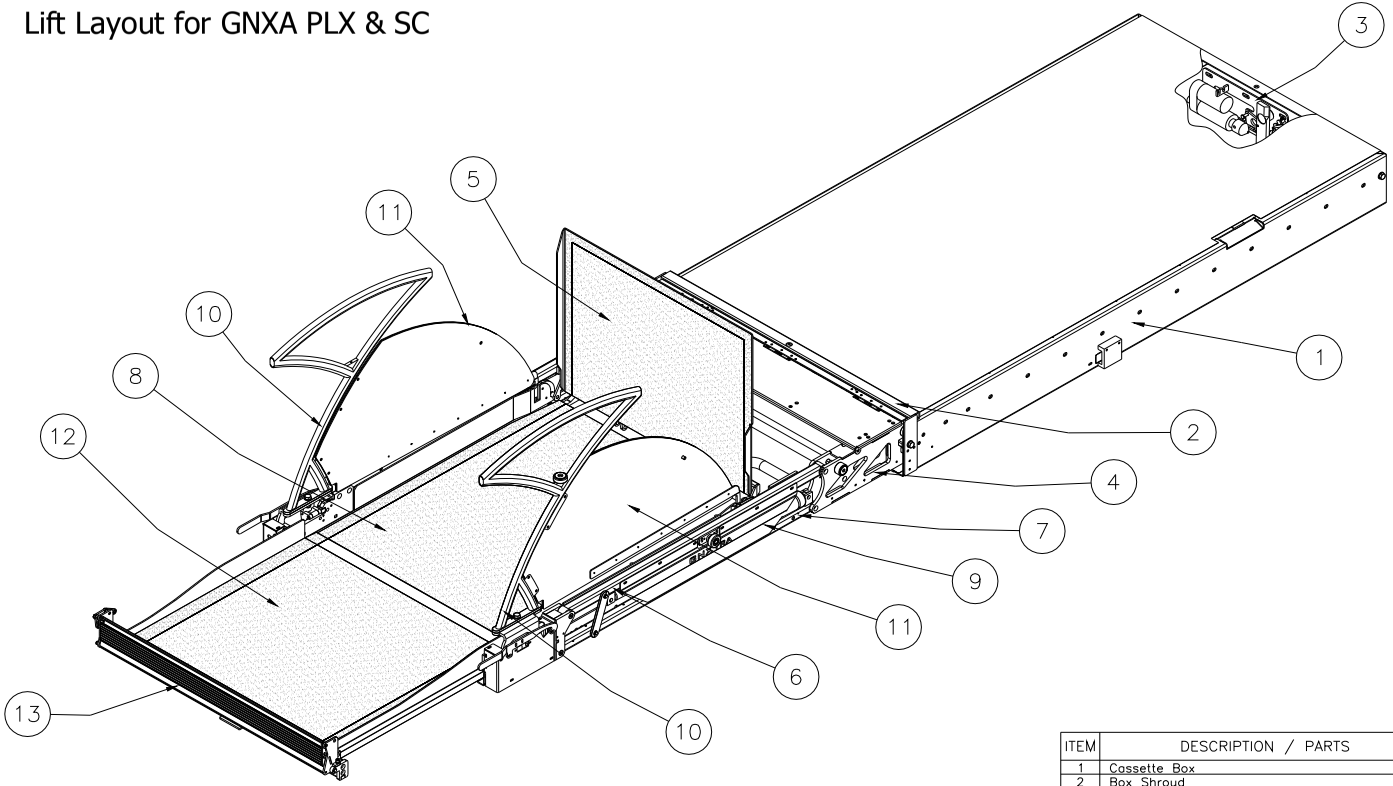

ITEM	DESCRIPTION / PARTS
1	Cassette Box
2	Box Shroud
3	Box Lock – Automatic
4	Carriage
5	Bridge Plate
6	Top Arms
7	Bottom Arms
8	Platform
9	Arm Guard
10	Handrail
11	Handrail Guard
12	Platform Extension
13	Roll off Ramp

Lift Layout for GNXA PLX & SC

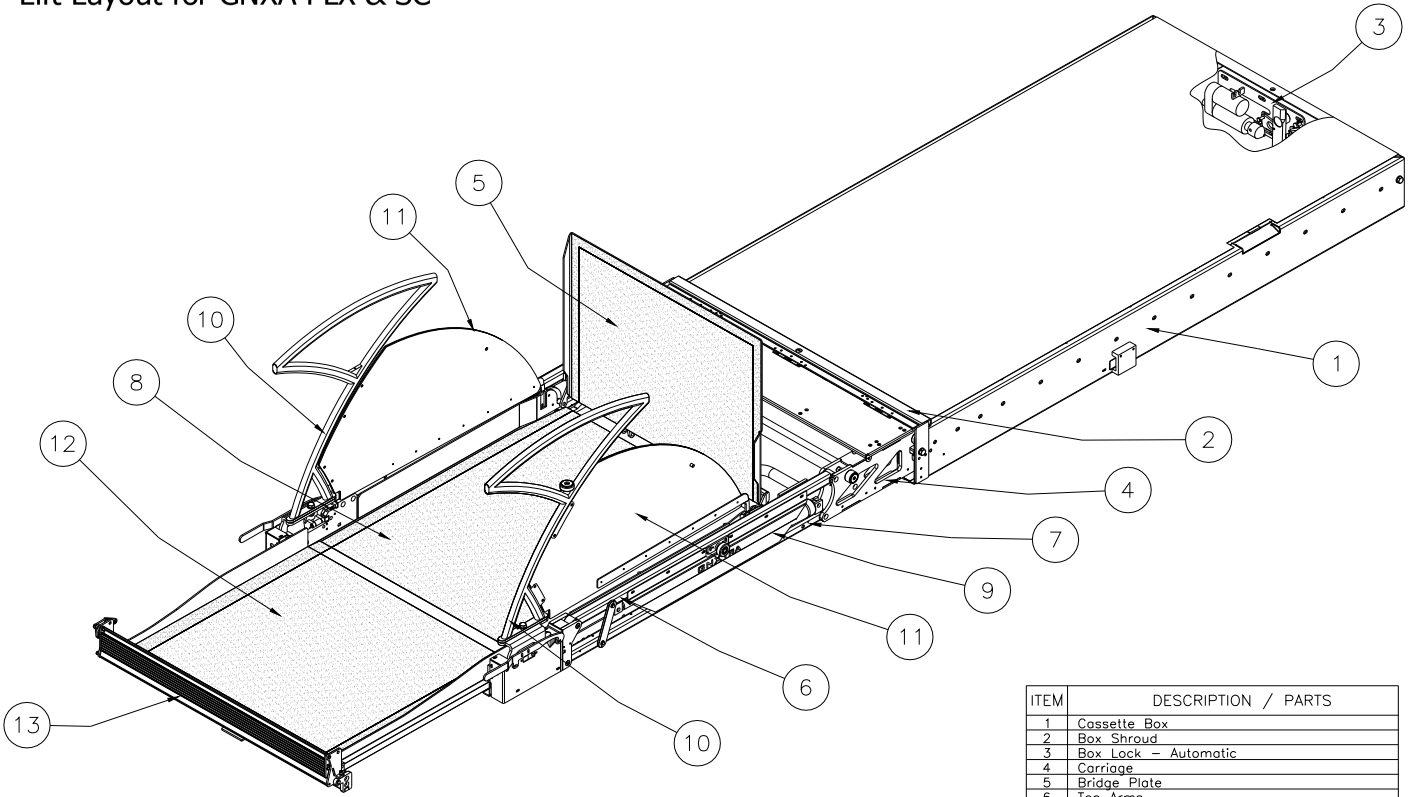

ITEM	DESCRIPTION / PARTS
1	Cassette Box
2	Box Shroud
3	Box Lock – Automatic
4	Carriage
5	Bridge Plate
6	Top Arms
7	Bottom Arms
8	Platform
9	Arm Guard
10	Handrail
11	Handrail Guard
12	Platform Extension
13	Roll off Ramp

Box Layout for GNXA PLX

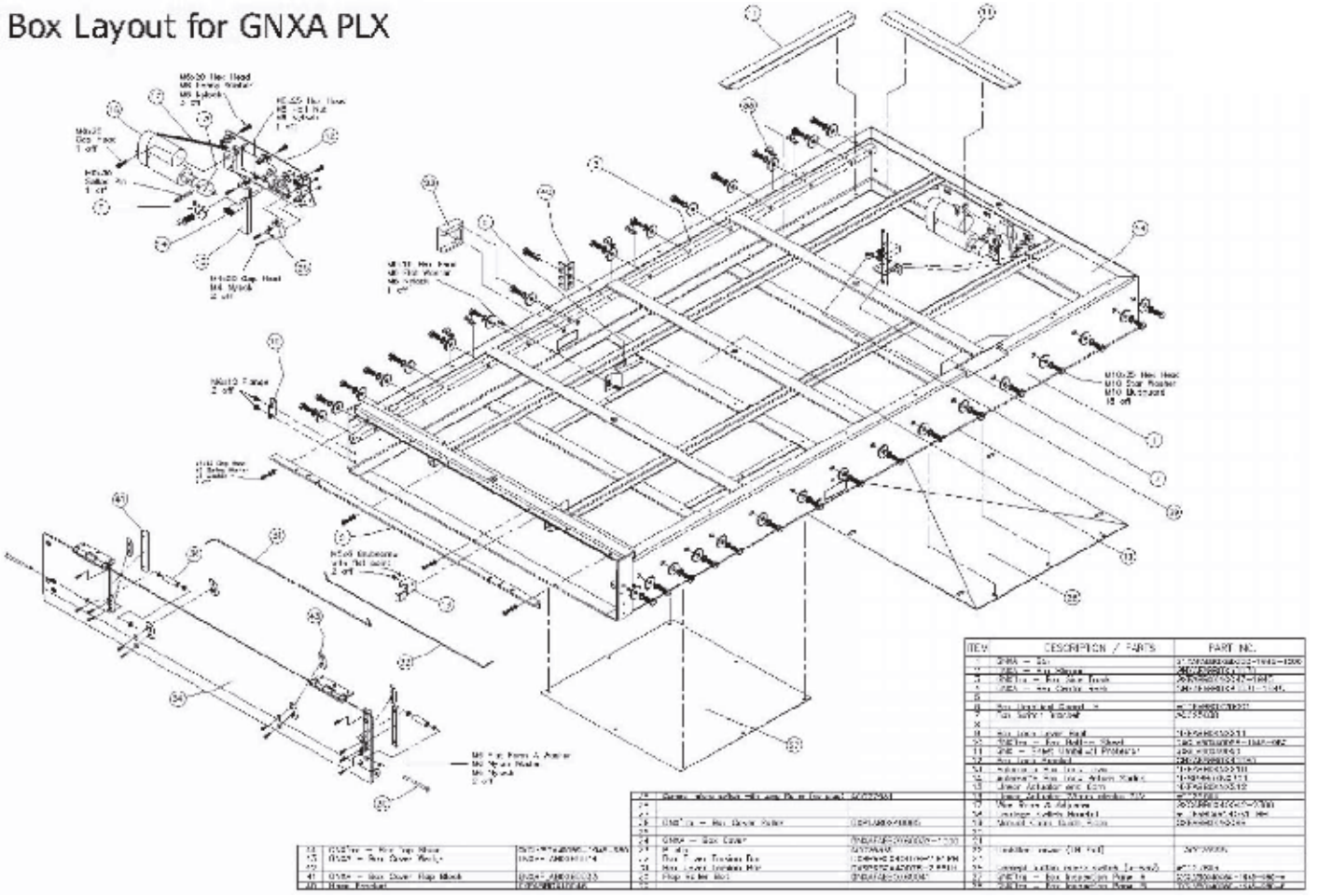

ITEM	DESCRIPTION / PARTS	PART NO.
1	GNXA – Box	[illegible]
2	GNXA – Top Plate	[illegible]
3	GNXA – Box Side Rails	[illegible]
4	GNXA – Box Center Rails	[illegible]
5		
6	Box Internal Gusset –	[illegible]
7	Box Safety Bracket	[illegible]
8		
9	Box Lower Cover Rail	[illegible]
10	GNXTm – Box Rail – Steel	[illegible]
11	GNX – Steel Undercut Protector	[illegible]
12	Box Lower Bracket	[illegible]
13	Hydraulic Pipe Lower Cover	[illegible]
14	Hydraulic Pipe Lower Return Hoses	[illegible]
15	Linear Actuator and Cover	[illegible]
16	Linear Actuator Mounting Block	[illegible]
17	Box Wire & Adjuster	[illegible]
18	Linear Actuator Bracket	[illegible]
19	Wheel Lower Bracket	[illegible]
20		
21		
22		
23	Box Cover Hinge Bracket	[illegible]
24	GNXA – Box Cover	[illegible]
25	[illegible]	[illegible]
26	Box Cover Tension Bar	[illegible]
27	Box Cover Tension Nut	[illegible]
28	Hydraulic Cover (OR Foil)	[illegible]
29		
30	Linear Actuator Cover Plate A	[illegible]
31	GNXTm – Box Cover Hinge Plate	[illegible]
32	Hinge Plate Bolt	[illegible]
33	GNXTm – Box Cover Hinge Plate B	[illegible]
34	GNXTm – Box Cover Hinge Plate C	[illegible]
35	GNXTm – Box Cover Hinge Plate D	[illegible]
36	GNXTm – Box Cover Hinge Plate E	[illegible]
37	GNXTm – Box Cover Hinge Plate F	[illegible]
38	GNXTm – Box Cover Hinge Plate G	[illegible]
39	GNXTm – Box Cover Hinge Plate H	[illegible]
40	GNXTm – Box Cover Hinge Block	[illegible]
41	Hose Bracket	[illegible]

Box Layout for GNXA SC & V

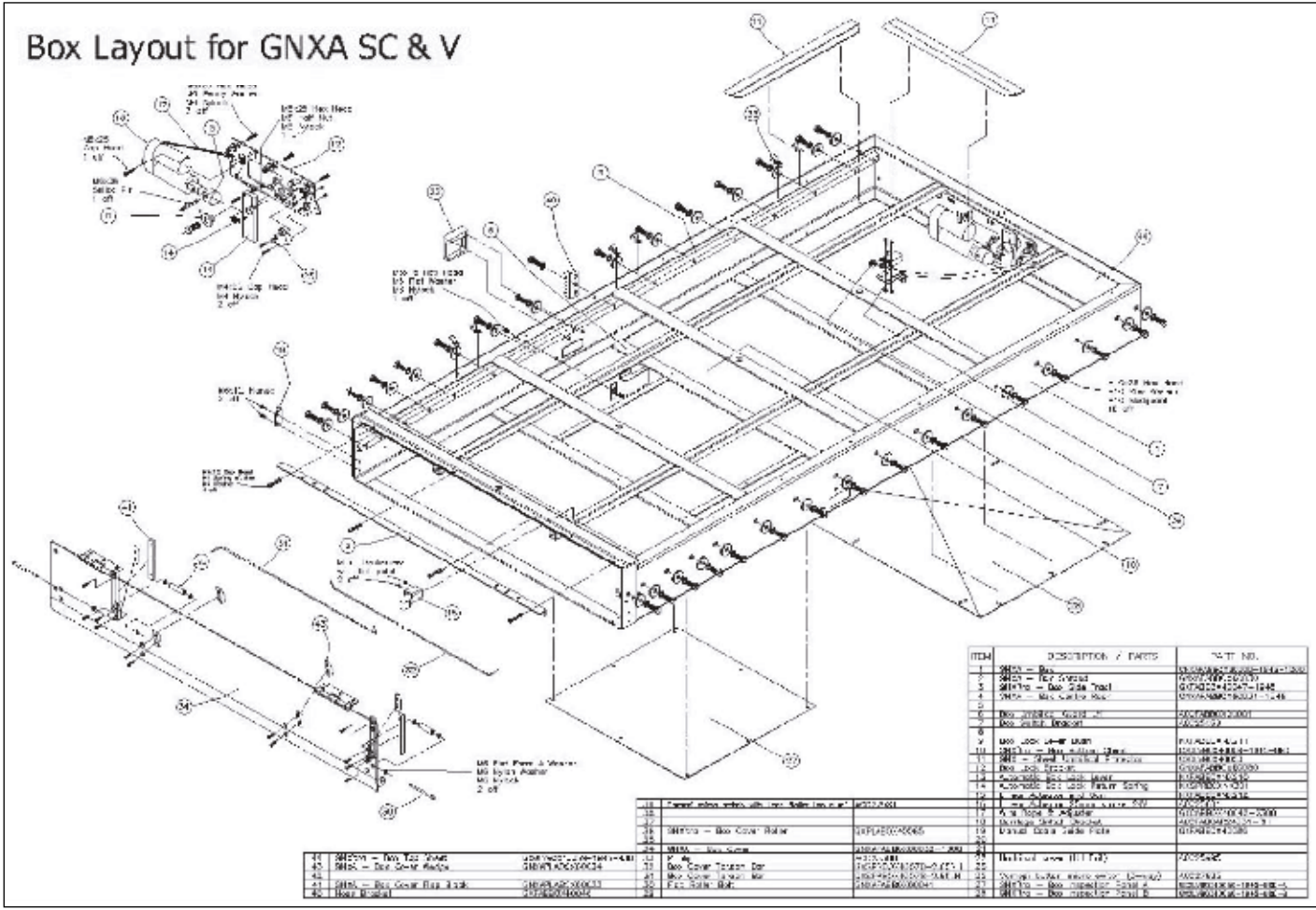

ITEM	DESCRIPTION / PARTS	PART NO.
1	[illegible] – Box	[illegible]
2	[illegible] – Box Support	[illegible]
3	[illegible] – Box Side Track	[illegible]
4	[illegible] – Box Center Rail	[illegible]
5		
6	Box [illegible] Guide [illegible]	[illegible]
7	Box Switch Bracket	[illegible]
8		
9	Box Lock Lever Bolt	[illegible]
10	[illegible] – Box Hinge Plate	[illegible]
11	[illegible] – Steel [illegible]	[illegible]
12	Box Lock Spring	[illegible]
13	Automatic Box Lock Lever	[illegible]
14	Automatic Box Lock Return Spring	[illegible]
15	[illegible]	[illegible]
16	[illegible]	[illegible]
17	[illegible]	[illegible]
18	Tension Adjuster	[illegible]
19	Manual Cover Guide Plate	[illegible]
20		
21		
22	[illegible] – Box Cover	[illegible]
23	[illegible] – Box Cover Roller	[illegible]
24		
25		
26	[illegible] – Box Cover	[illegible]
27	[illegible]	[illegible]
28	Box Cover Torsion Bar	[illegible]
29	Box Cover Lower Bar	[illegible]
30	Box Cover Roller Bolt	[illegible]
31		
32		
33	Electrical Lock (Fitted)	[illegible]
34		
35	Overhead Box Lock Lever (Manual)	[illegible]
36	[illegible] – Box Inspection Cover A	[illegible]
37	[illegible] – Box Inspection Cover B	[illegible]
38		
39	[illegible] – Box Top Cover	[illegible]
40	[illegible] – Box Cover Roller	[illegible]
41		
42		
43	[illegible] – Box Cover Stop Block	[illegible]
44	Floor Bracket	[illegible]

Platform Layout for GNXA PLX

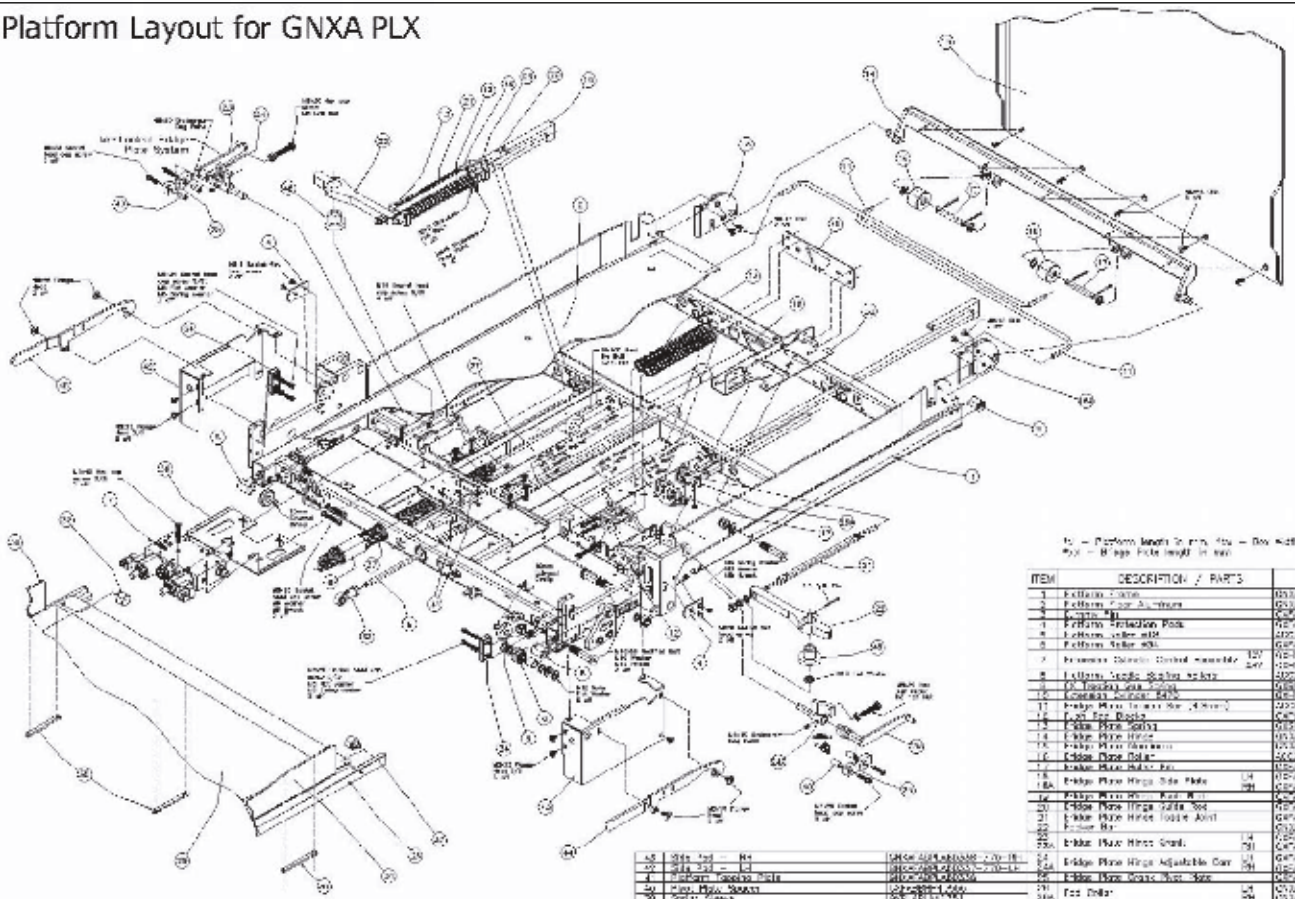

PL = Platform length in mm, PW = Box width in mm
PHX = Bridge Plate length in mm

ITEM	DESCRIPTION / PARTS		PART NO.
1	Platform Frame		[illegible]
2	Platform Floor Assembly		[illegible]
3	Castor Wheel		[illegible]
4	Platform Protection Plate		[illegible]
5	Platform roller mid		[illegible]
6	Platform Roller side		[illegible]
7	Powerpack Electric Control Assembly	110V	[illegible]
		240V	[illegible]
8	Platform Handle Stopping Bracket		[illegible]
9	Oil Tracking Unit Frame		[illegible]
10	Platform Cylinder Bracket		[illegible]
11	Bridge Plate Tension Bar (4 Pieces)		[illegible]
12	Foot Rest Bracket		[illegible]
13	Bridge Plate Spring		[illegible]
14	Bridge Plate Hinge		[illegible]
15	Bridge Plate Hinge		[illegible]
16	Bridge Plate Roller		[illegible]
17	Bridge Plate Roller Pin		[illegible]
18	Bridge Plate Hinge Side Plate	LH	[illegible]
18A		RH	[illegible]
19	Bridge Plate Pin - Rear Pivot		[illegible]
20	Bridge Plate Hinge Side Seal		[illegible]
21	Bridge Plate Hinge Toggle Joint		[illegible]
22	Roller Pin		[illegible]
23	Bridge Plate Hinge Stand	LH	[illegible]
23A		RH	[illegible]
24	Bridge Plate Hinge Adjustable Cam	LH	[illegible]
24A		RH	[illegible]
25	Bridge Plate Cross Pivot Rod		[illegible]
26		LH	[illegible]
26A	Fan Roller	RH	[illegible]
27	Foot Rest Side (Platform Length)		[illegible]
28	Cylinder Spring		[illegible]
29	Extension Foot Assembly		[illegible]
30	L.H. Extension Handrail Cross Plate		[illegible]
31	L.H. Extension Handrail Cross Plate		[illegible]
32	Extension platform cam followers		[illegible]
33	Gas Spring Extension Foot		[illegible]
34	Side Rail - RH		[illegible]
35	Side Rail - LH		[illegible]
36	Platform Toggle Plate		[illegible]
37	Plate Pivot Bracket		[illegible]
38	Spring Stopper		[illegible]
39	Platform Lower Bracket		[illegible]
40	Platform Spring		[illegible]
41	Platform Wear Plate		[illegible]
42	Platform Wear Plate		[illegible]
43	Lower Hook		[illegible]
44	Gas Spring Extension Foot		[illegible]
45	Spring Pin		[illegible]
46	Spring Cap		[illegible]
47	Spring Roller mid		[illegible]
48	Spring Collar LH		[illegible]
49	Cover Lower Plate		[illegible]
50	Cover Lower Plate		[illegible]

Platform Layout for GNXA SC

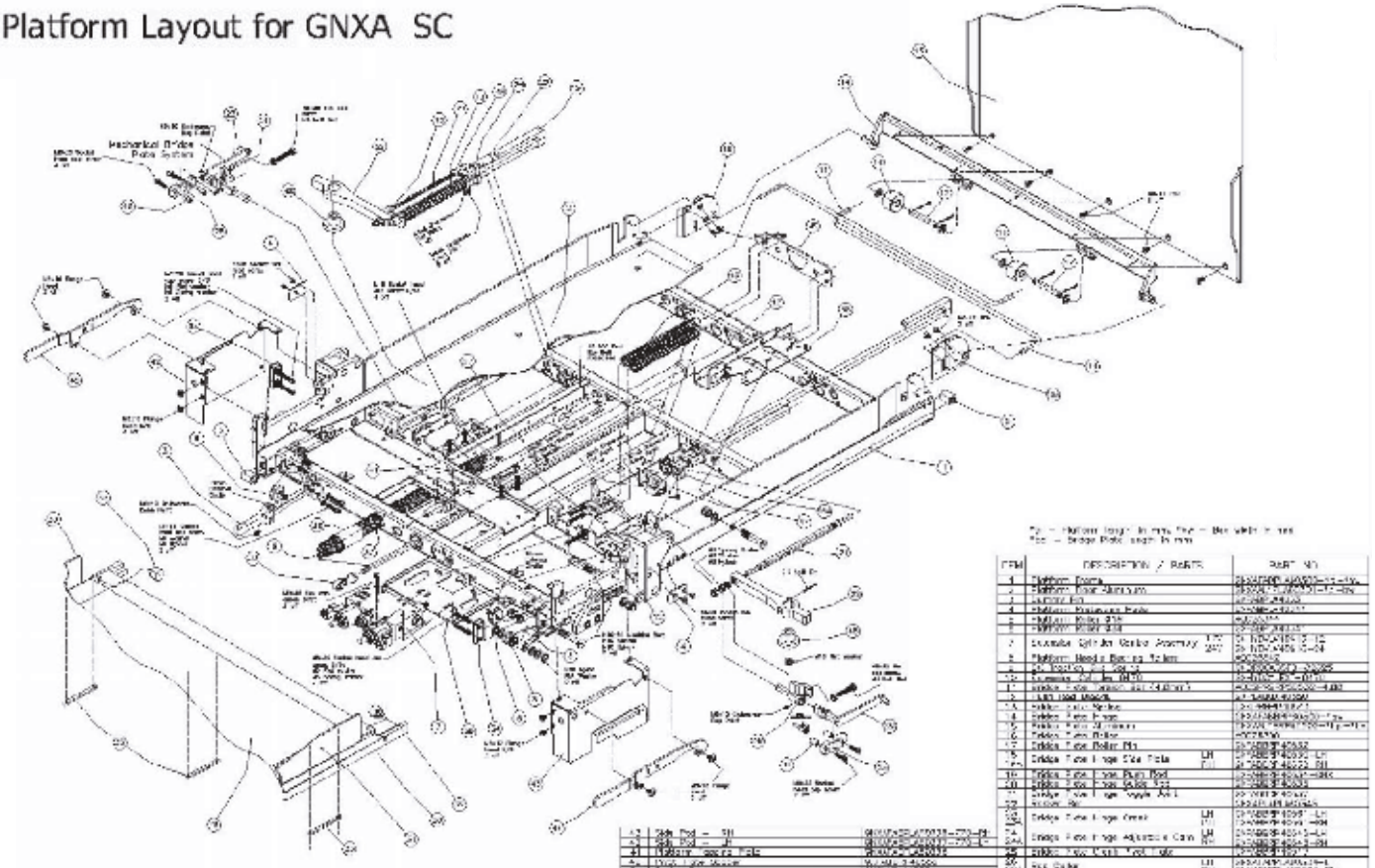

ITEM	DESCRIPTION / PARTS		PART NO
1	Platform Frame		[illegible]
2	Platform Floor Aluminum		[illegible]
3	Lanyard Pin		[illegible]
4	Platform Pressure Plate		[illegible]
5	Platform Roller Stile		[illegible]
6	Platform Roller Stile		[illegible]
7	Extender Spring Roller Proximity	LH / RH	[illegible]
8	Platform Header Bearing Roller		[illegible]
9	[illegible]		[illegible]
10	Extender Stop Bar (RH)		[illegible]
11	Bridge Plate Latch (LH/RH)		[illegible]
12	Left Hand Bracket		[illegible]
13	Bridge Plate Spring		[illegible]
14	Bridge Plate Bracket		[illegible]
15	Bridge Plate Roller		[illegible]
16	Bridge Plate Roller Pin		[illegible]
17	Bridge Plate Hinge Side Plate	LH / RH	[illegible]
18	Bridge Plate Hinge Pivot Rod		[illegible]
19	Bridge Plate Hinge Guide Arm		[illegible]
20	Bridge Plate Hinge Toggle Arm		[illegible]
21	Hinge Pin		[illegible]
22	Bridge Plate Hinge Cover	LH / RH	[illegible]
23	Bridge Plate Hinge Adjustable Cam	LH / RH	[illegible]
24	Bridge Plate Latch Tool Plate		[illegible]
25	Hole Cutter	LH / RH	[illegible]
26	Spring Cover		[illegible]
27	Nylon Wear Strip (500mm Long)		[illegible]
28	Extender Frame		[illegible]
29	Extender Floor Aluminum		[illegible]
30	1st Extender Horizontal Cam Plate		[illegible]
31	2nd Extender Horizontal Cam Plate		[illegible]
32	Extender platform cam follower		[illegible]

33	Gas Rod – SH	[illegible]
34	Gas Rod – LH	[illegible]
35	Platform Gas Plate	[illegible]
36	Dock Tube Washer	[illegible]
37	Spring Cover	[illegible]
38	Platform Trim Bracket	[illegible]
39	Extender Stop	[illegible]
40	Platform Trim Plate	[illegible]
41	Gas Plate	[illegible]
42	Gas Spring Extension Rod	[illegible]

43	Spring Plate	[illegible]
44	Spring Bar Plate	[illegible]
45	Spring Cover-RH	[illegible]
46	Spring Cover-LH	[illegible]
47	Spring Cover Plate	[illegible]
48	Spring Cover Plate	[illegible]

Platform Layout for GNXA-V

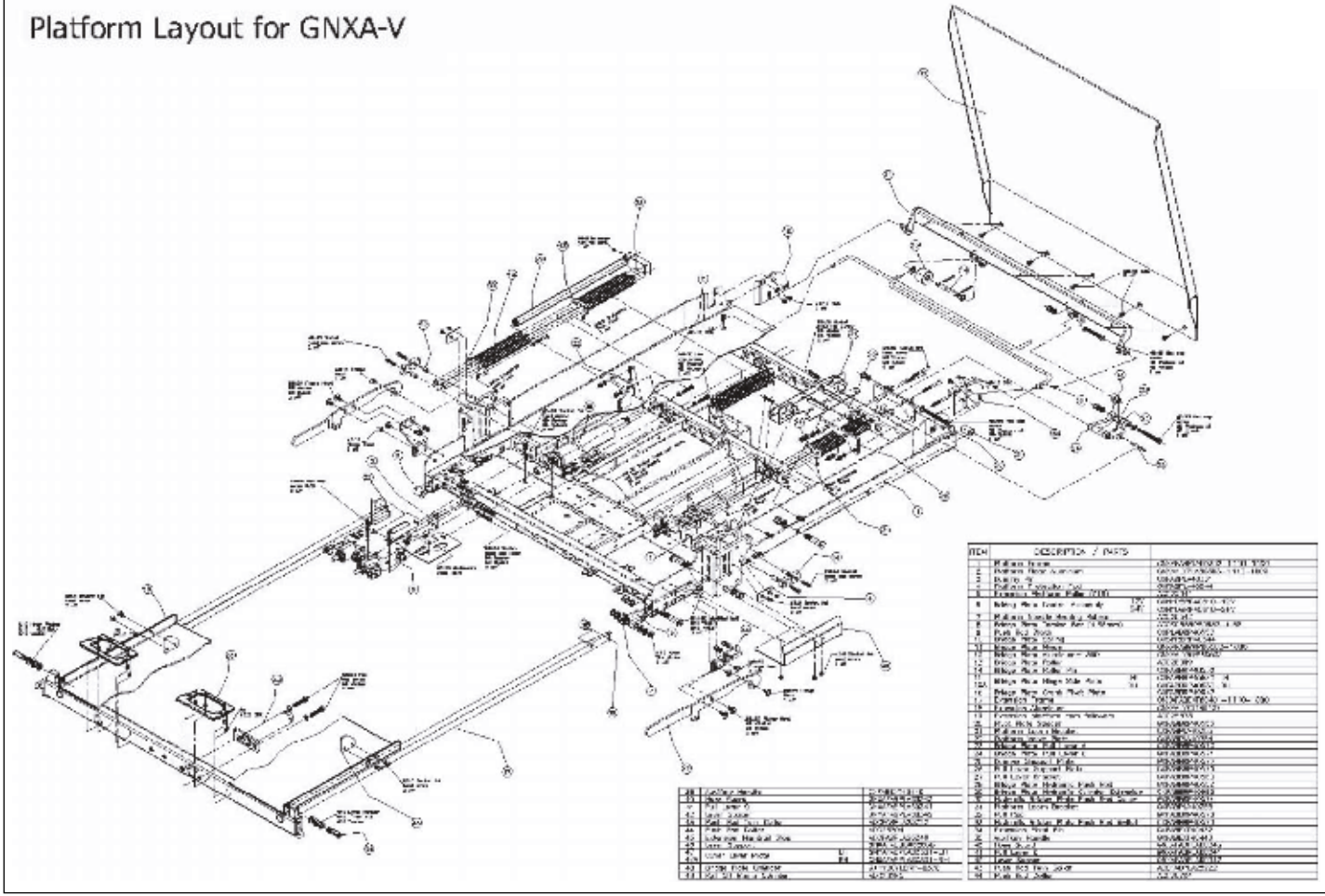

Carriage Layout for GNXA PLX

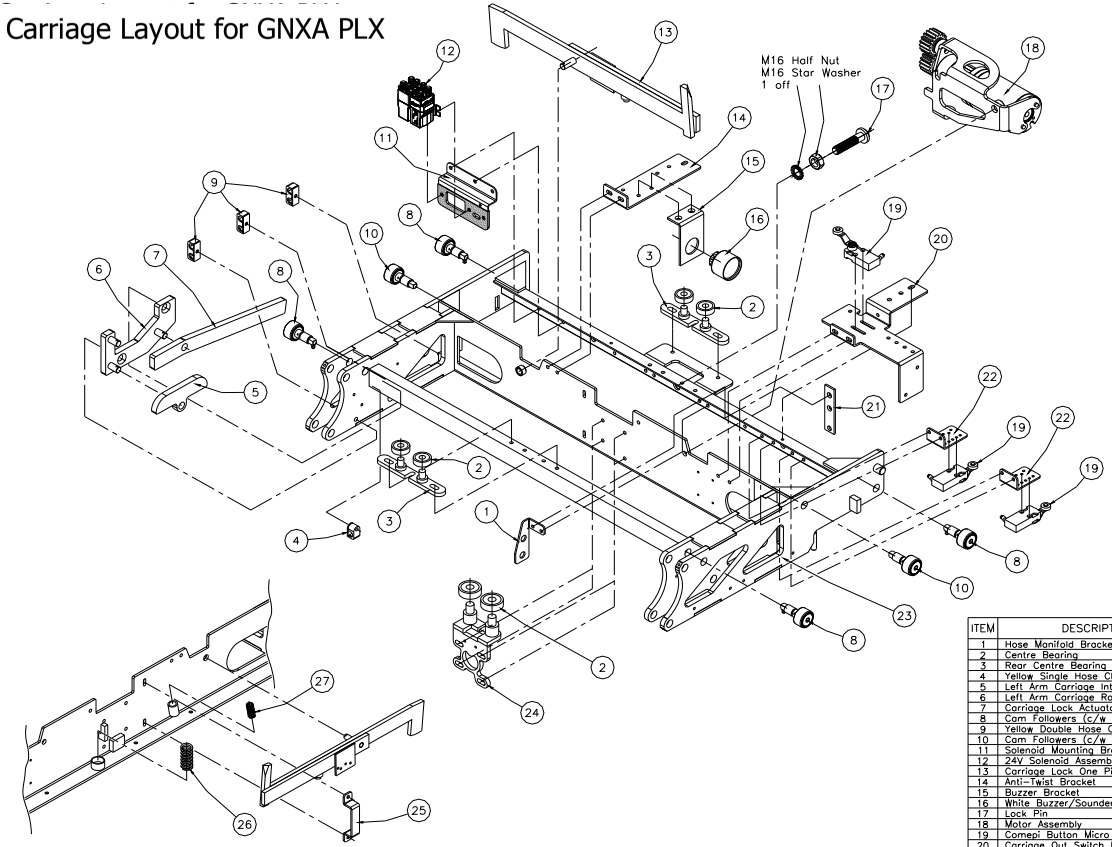

ITEM	DESCRIPTION / PARTS	PART NO.
1	Hose Manifold Bracket	ACC26677
2	Centre Bearing	ACC27298
3	Rear Centre Bearing Carrier	ACC25085
4	Yellow Single Hose Clip	ACCHYDCPLB212PA
5	Left Arm Carriage Intermediate Rocker	NXFABCARNX236
6	Left Arm Carriage Rocker Plate	NXFABCARNX234
7	Carriage Lock Actuator	GNXAFABCAR60180
8	Cam Followers (c/w nuts & 90° nipples)	ACC25590
9	Yellow Double Hose Clip	ACCHYDCPLBG21212PA
10	Cam Followers (c/w nuts & straight nipples)	ACC25739
11	Solenoid Mounting Bracket	GNXAFABCAR60131
12	24V Solenoid Assembly	ACC27466
13	Carriage Lock One Piece	ACCFABCAR24030-1000
14	Anti-Twist Bracket	ACCFABCAR24010-050
15	Buzzer Bracket	ACC26045
16	White Buzzer/Sounder Assembly	ACC27024
17	Lock Pin	GNXAFABCAR60132
18	Motor Assembly	ACCGASMOT24068-24V
19	Comepi Button Micro Switch	ACC27603
20	Carriage Out Switch Bracket	ACCFABCAR50181
21	Carriage Loom Support	ACC25876
22	Box Switch Mounting Bracket	ACCFABCAR24016
23	Carriage Frame	GNXAFABCAR60100-1000
24	Front Centre Bearing Carrier (Light Weight)	ACC27298
25	Hatchet Lock Guide Bracket	ACC25026
26	Motor Mounting Bracket Retaining Spring	ACCSPRCAR24012
27	Carriage Lock Return Spring	ACC25552
28		
29		
30		

Carriage Layout for GNXA SC

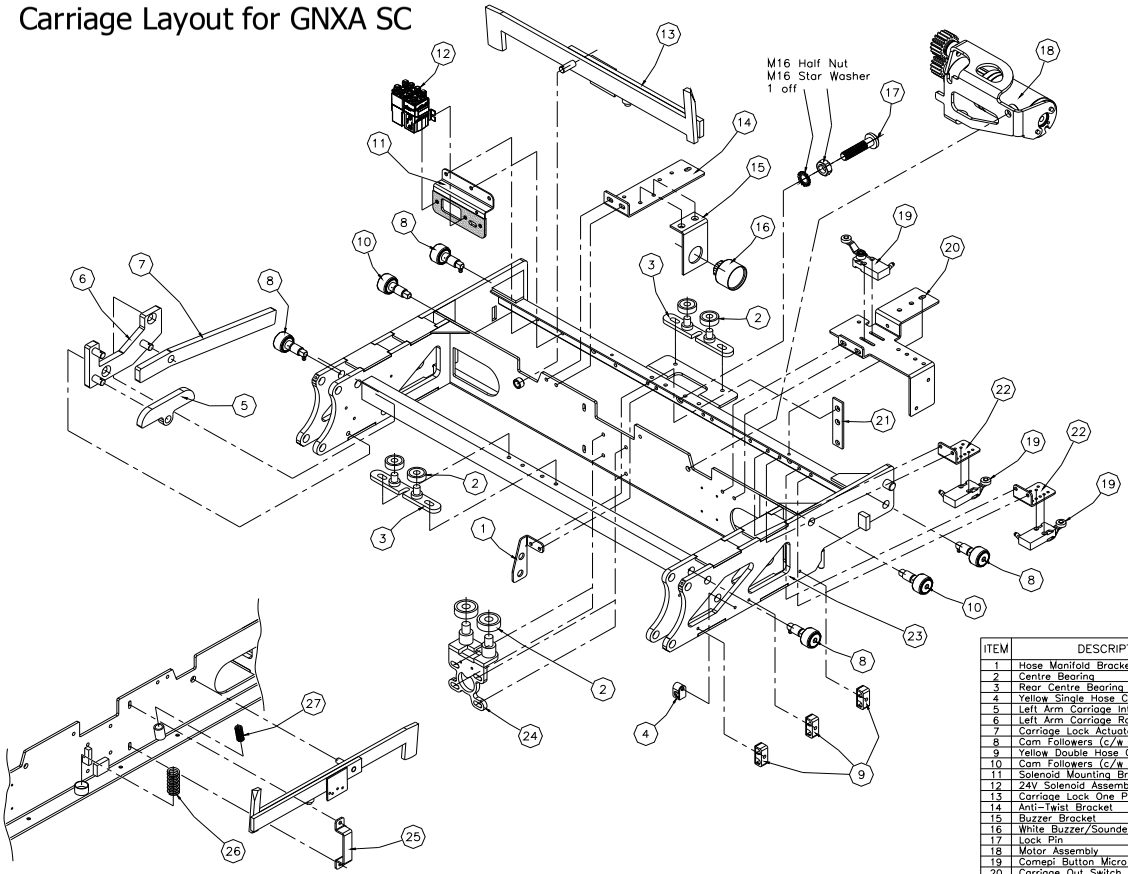

ITEM	DESCRIPTION / PARTS	PART NO.
1	Hose Manifold Bracket	ACC26677
2	Centre Bearing	ACC27298
3	Rear Centre Bearing Carrier	ACC25085
4	Yellow Single Hose Clip	ACCHYDCPLB212PA
5	Left Arm Carriage Intermediate Rocker	NXFABCARNX236
6	Left Arm Carriage Rocker Plate	NXFABCARNX234
7	Carriage Lock Actuator	GNXAFABCAR60180
8	Cam Followers (c/w nuts & 90° nipples)	ACC25590
9	Yellow Double Hose Clip	ACCHYDCPLBG21212PA
10	Cam Followers (c/w nuts & straight nipples)	ACC25739
11	Solenoid Mounting Bracket	GNXAFABCAR60131
12	24V Solenoid Assembly	ACC27466
13	Carriage Lock One Piece	ACCFABCAR24030-1000
14	Anti-Twist Bracket	ACCFABCAR24010-050
15	Buzzer Bracket	ACC26045
16	White Buzzer/Sounder Assembly	ACC27024
17	Lock Pin	GNXAFABCAR60132
18	Motor Assembly	ACCGASMOT24068-24V
19	Comepi Button Micro Switch	ACC27603
20	Carriage Out Switch Bracket	ACCFABCAR50181
21	Carriage Loom Support	ACC25876
22	Box Switch Mounting Bracket	ACCFABCAR24016
23	Carriage Frame	GNXAFABCAR60100-1000
24	Front Centre Bearing Carrier (Light Weight)	ACC27298
25	Hatchet Lock Guide Bracket	ACC25026
26	Motor Mounting Bracket Retaining Spring	ACCSPRCAR24012

Carriage Layout for GNXA V

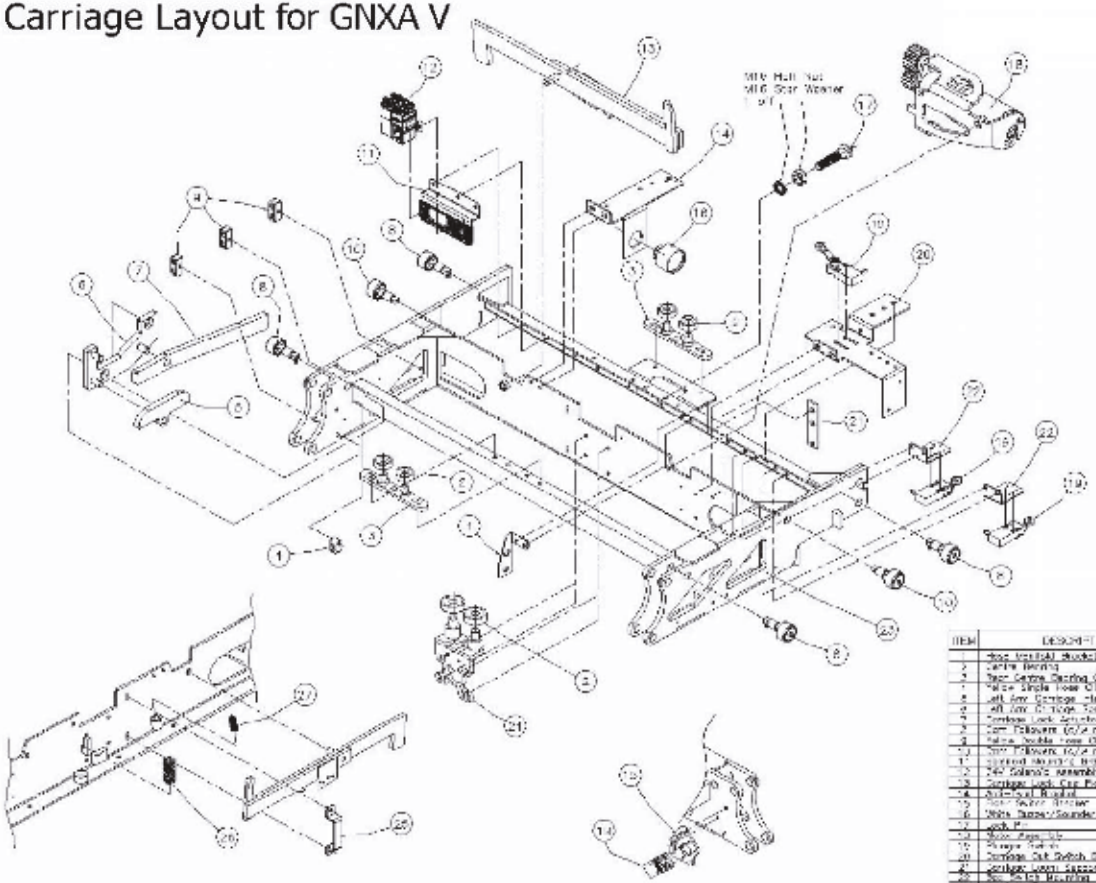

ITEM	DESCRIPTION / PARTS	PART NO.	Qty
1	Rear Vertical Bracket	[illegible]	1
2	Lower Bearing	[illegible]	1
3	Rear Centre Starting Carrier	[illegible]	1
4	Nylon Single Hose Clip	[illegible]	2
5	Left Arm Carriage Intermediate Roller	[illegible]	1
6	Left Arm Carriage Tower Plate	[illegible]	1
7	Carriage Lock Spacer	[illegible]	1
8	Cam Follower (1/4 nuts & 3/8" washer)	[illegible]	1
9	Nylon Double Hose Clip	[illegible]	2
10	Cam Follower (1/4 nuts & washer inside)	[illegible]	2
11	Carriage Mounting Bracket	[illegible]	1
12	240 Solenoid assembly	[illegible]	1
13	Carriage Lock Cap Piece	[illegible]	1
14	Anti-Twist Bracket	[illegible]	1
15	Anti-Twist Bracket	[illegible]	1
16	Mole Spreader/Sounder Assembly	[illegible]	1
17	Lock Pin	[illegible]	1
18	Rear Axle Clip	[illegible]	1
19	Plunger Valve	[illegible]	1
20	Carriage Out Switch Bracket	[illegible]	1
21	Carriage Lower Spacer	[illegible]	1
22	Rear Mole Mounting Bracket	[illegible]	2
23	Carriage Frame	[illegible]	1
24	Front Centre Bracket Carrier (Spin Weight)	[illegible]	1
25	Holder Low Cable Holder	[illegible]	1
26	Rear Mounting Bracket Mounting Spring	[illegible]	1
27	Carriage Lock Pin / Spring	[illegible]	1

Handrail Layout for GNXA PLX & SC

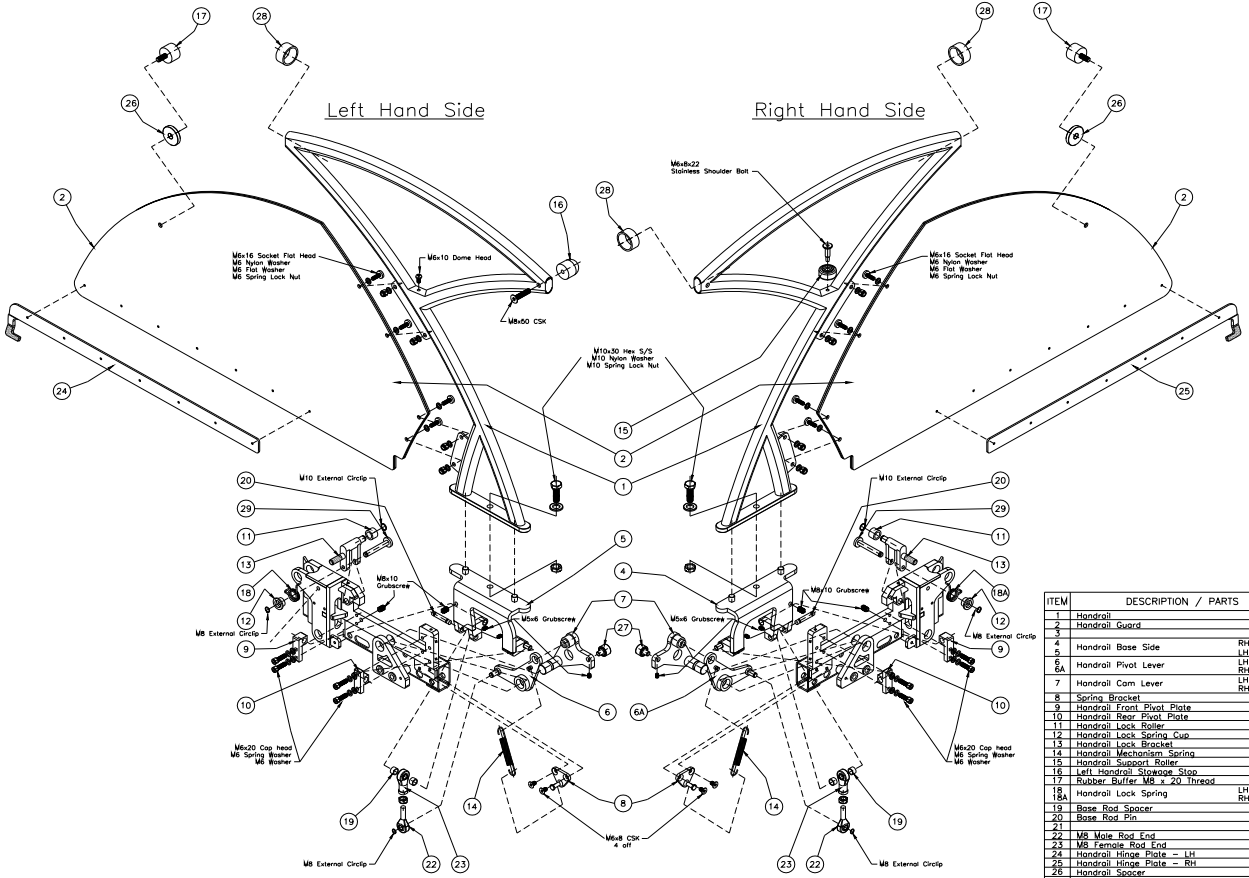

ITEM	DESCRIPTION / PARTS		PART NO.
1	Handrail		GXFABHAN40700
2	Handrail Guard		GNXAPLAHAN60781
3			
4	Handrail Base Side	RH	GXFABHAN40730
5		LH	GXFABHAN40731
6	Handrail Pivot Lever	LH	GXFABHAN40732-LH
6A		RH	GXFABHAN40732-RH
7	Handrail Cam Lever	LH	GXFABHAN40733-LH
		RH	GXFABHAN40733-RH
8	Spring Bracket		GNXAFABHAN60732
9	Handrail Front Pivot Plate		GXFABHAN40735
10	Handrail Rear Pivot Plate		GXFABHAN40736
11	Handrail Lock Roller		GXFABHAN40751
12	Handrail Lock Spring Cup		GXFABHAN40758
13	Handrail Lock Bracket		GXFABHAN40759
14	Handrail Mechanism Spring		GXSPRHAN40740
15	Handrail Support Roller		GXPLAHAN40742
16	Left Handrail Stowage Stop		GXPLAHAN40752
17	Rubber Buffer M8 x 20 thread		ACC27027
18	Handrail Lock Spring	LH	GXSPRHAN40746-LH
18A		RH	GXSPRHAN40746-RH
19	Base Rod Spacer		GXFABHAN40747
20	Base Rod Pin		GXFABHAN40748
21			
22	M8 Male Rod End		GXBRGRODMALE-M8RS
23	M8 Female Rod End		GXBRGRODFEMALE-M8RS
24	Handrail Hinge Plate - LH		GNXAFABHAN60730
25	Handrail Hinge Plate - RH		GNXAFABHAN60731
26	Handrail Spacer		GNXAPLAHAN60733
27	Extension platform cam followers		ACC256673
28	Handrail Band		ACCPLAHAN50730
29	Handrail Lock Pin		GXFABHAN40750

*pl - Platform length in mm

Handrail Layout for GNXA - V

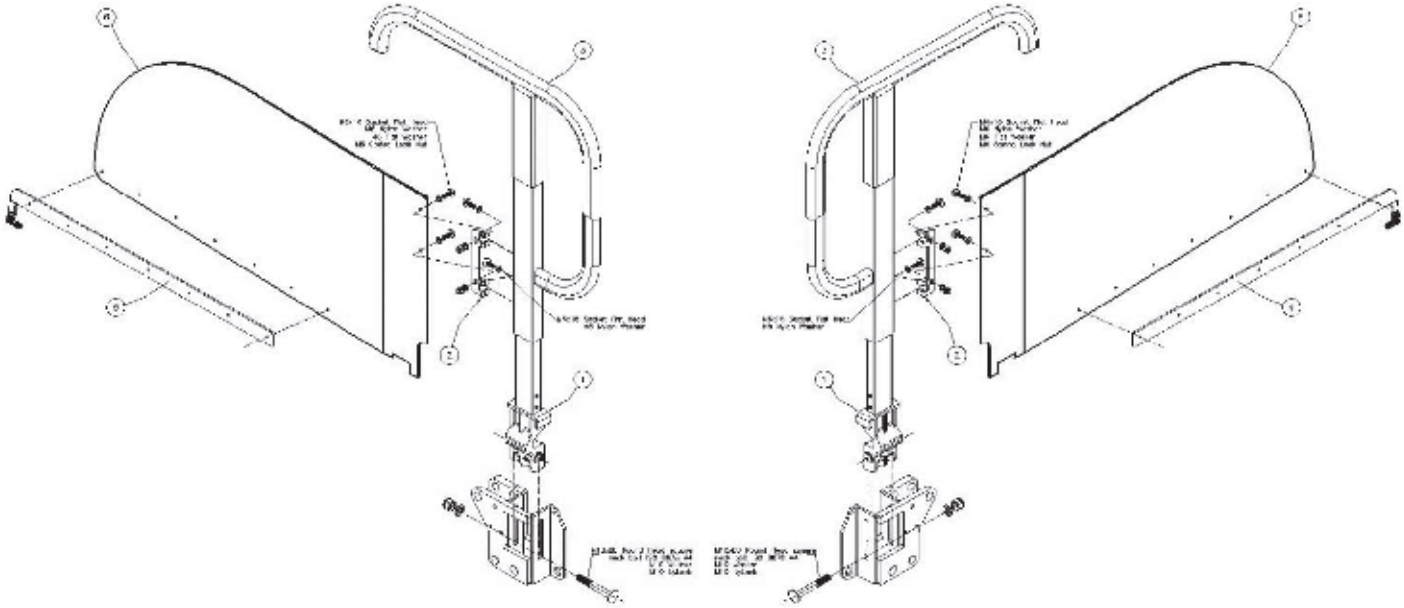

ITEM	DESCRIPTION / PARTS	PART NO.	ITEM
1	Telescopic "H" handrail - kg	[illegible]	1
1A	Telescopic "H" handrail	[illegible]	1
2	Seat fixing bracket	[illegible]	2
3	Telescopic "H" handrail	[illegible]	1
4	Handrail fixing plate - RH	[illegible]	1
5	Handrail fixing plate - LH	[illegible]	1
6	Handrail Guard	[illegible]	1
6A	Handrail Guard	[illegible]	1

Hydraulic

Section 3

Hydraulic Layout & fittings for GNXA PLX Lift

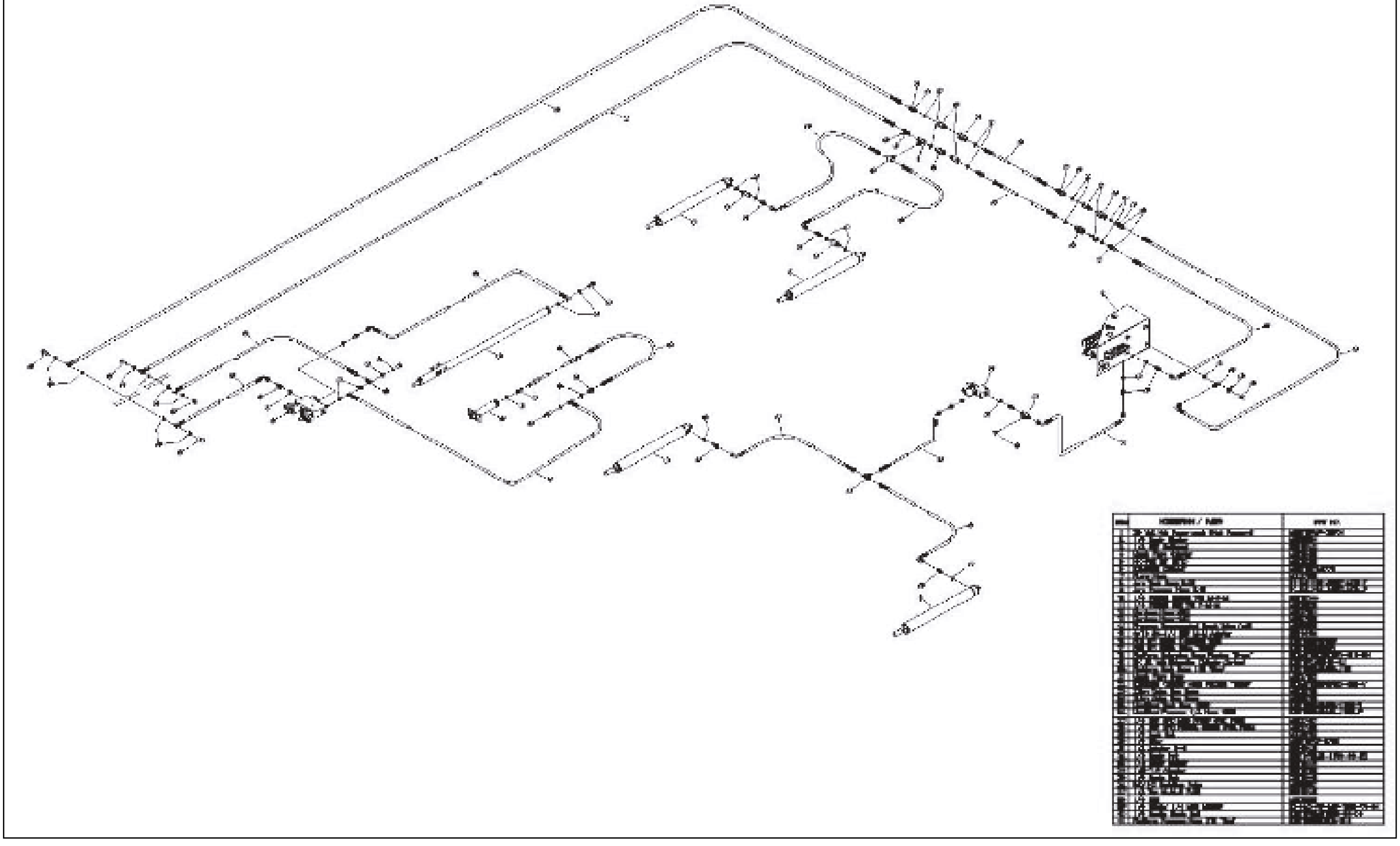

Hydraulic Layout & fittings for GNXA SC Lift

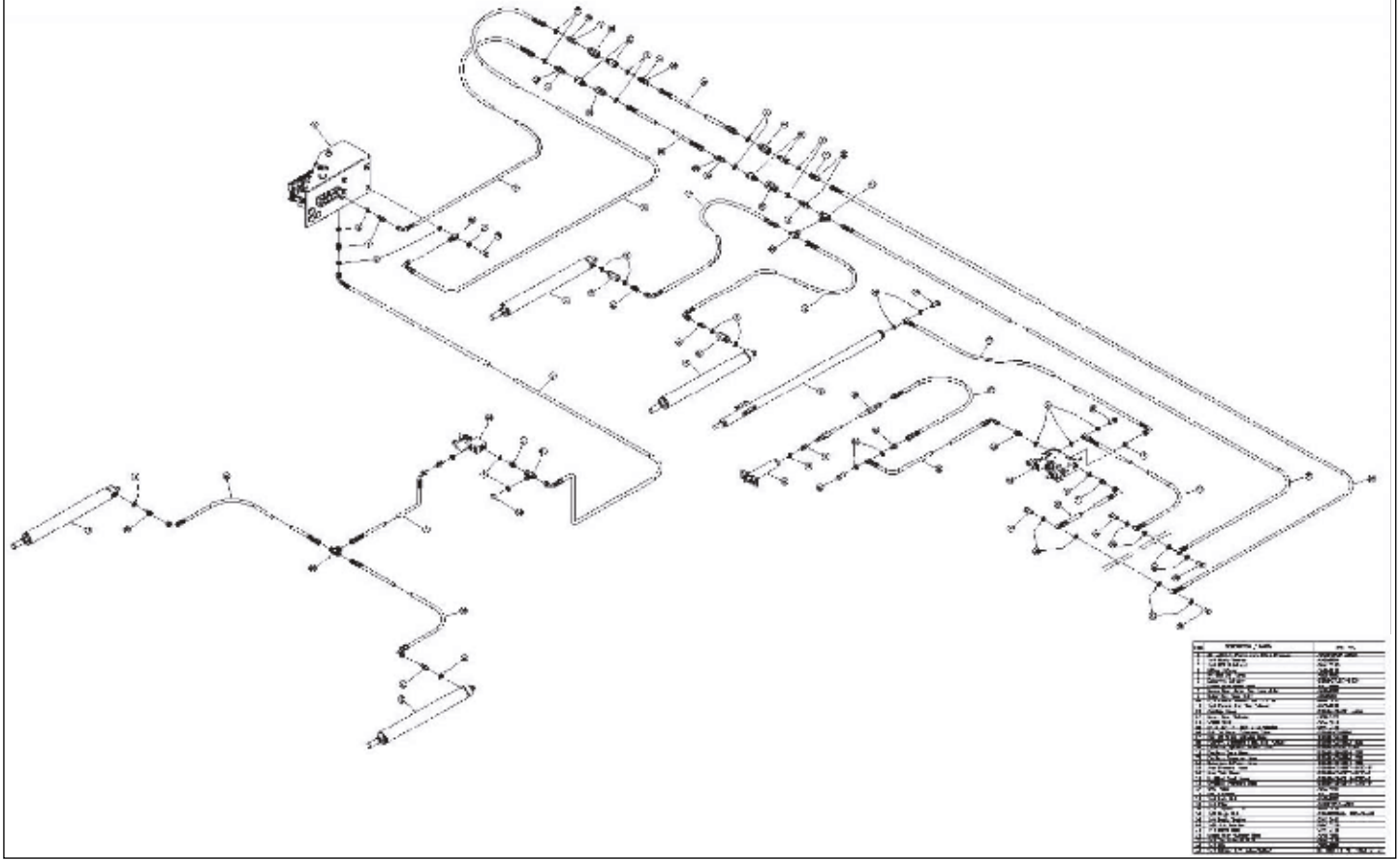

Hydraulic Layout & fittings for GNXA 'V'

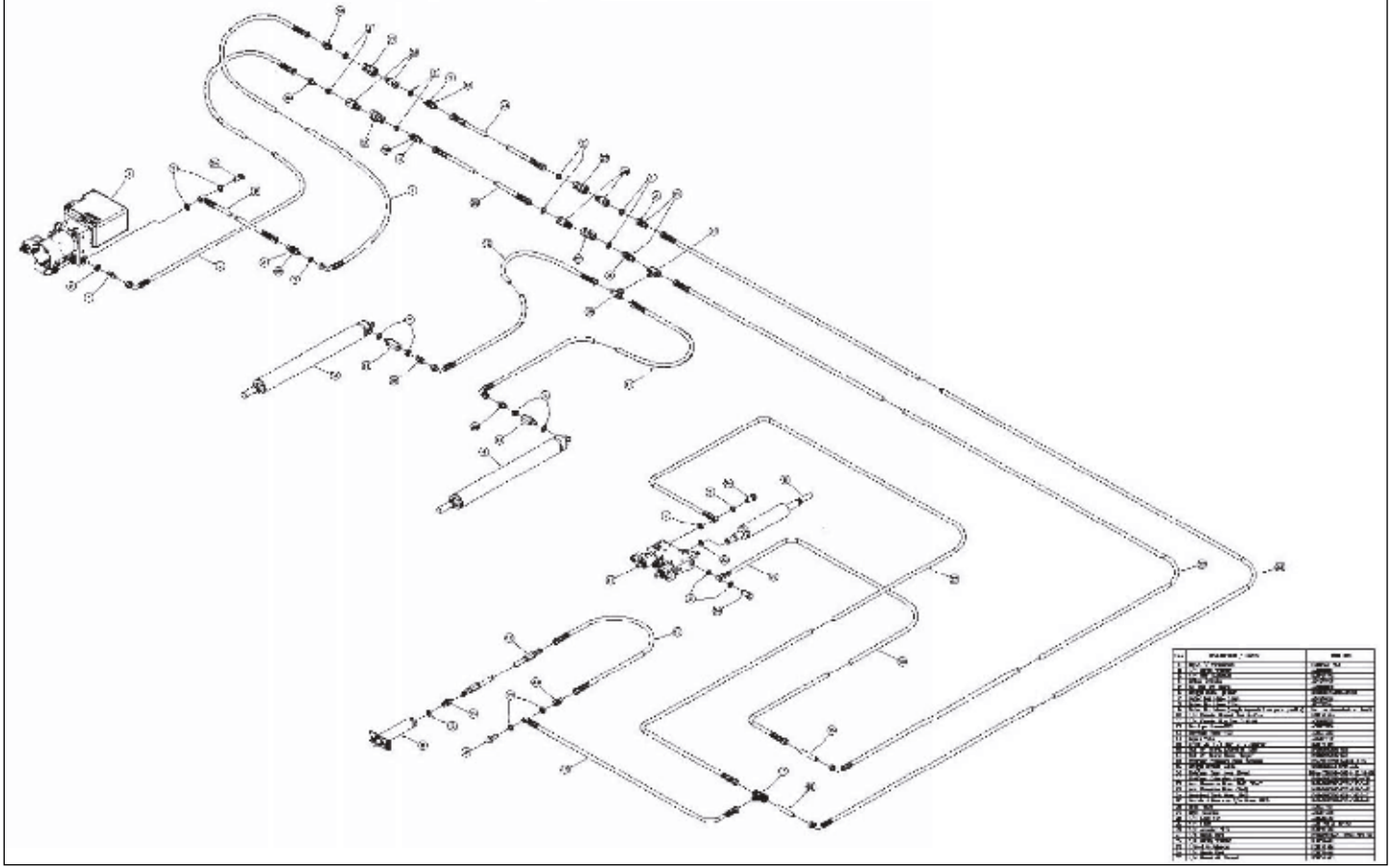

Electrical

Section 4

GNXA Electrical Layout for Box 'PLX'

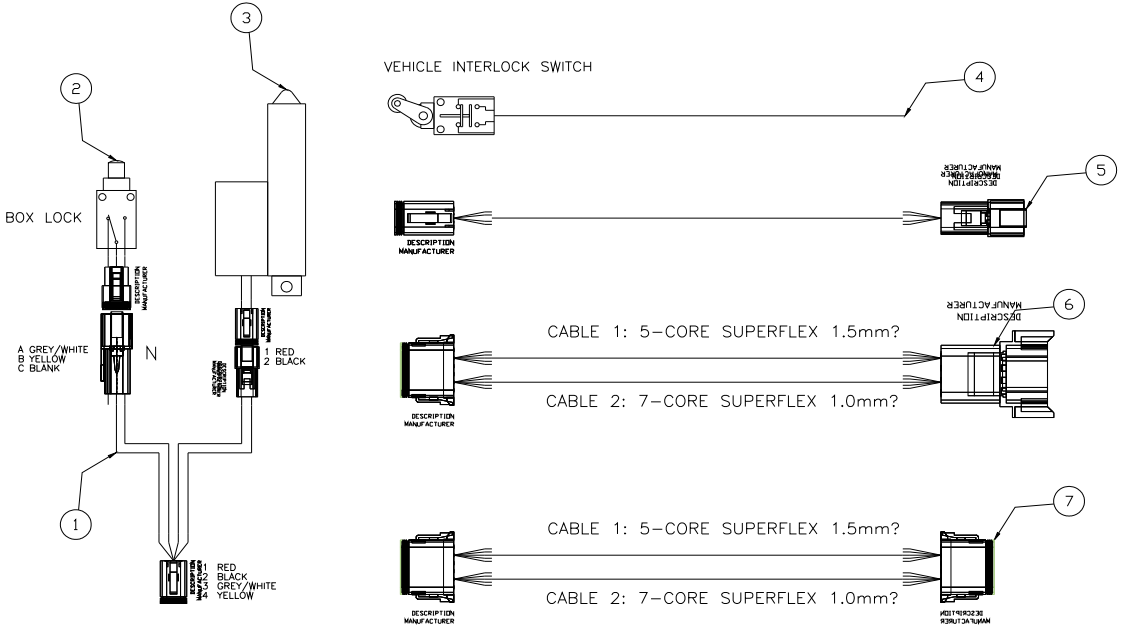

INTERLOCK CONNECTIONS	
WIRES	CONTACT TYPE
BLUE	NC
BROWN	NC
BLACK NO.1	NO
BLACK NO.2	NO

BOX LOCK CONNECTIONS	
PLUG	WIRES
1	RED
2	BLACK
3	GREY/WHITE
4	BLACK

UMBILICAL EXTENSION CONNECTIONS		
PLUG	CABLE 1	CABLE 2
1	1	
2	2	
3		1
4		2
5		3
6		4
7		5
8		6
9		GREEN/YELLOW
10	3	
11	4	
12	GREEN/YELLOW	

UMBILICAL CONNECTIONS		
PLUG	CABLE 1	CABLE 2
1	1	
2	2	
3		1
4		2
5		3
6		4
7		5
8		6
9		GREEN/YELLOW
10	3	
11	4	
12	GREEN/YELLOW	

BOX PARTS			
ITEM	QTY	DESCRIPTION / PARTS	PART NO.
1	1	Box Lock Loom	GXELCABLWD4005
2	1	Plunger Switch	ACC27603
3	1	Box Lock Actuator	xxxx
4	1	Vehicle Interlock Switch	ACC27603
5	1	Box Lock Extension Loom	GXELCCCRWD4007-24V
6	1	Umbilical Extension Cable	GXELCUMBWD4003
7	1	Umbilical Cable	GXELCUMBWD4003

GNXA Electrical Layout for Box SC & V

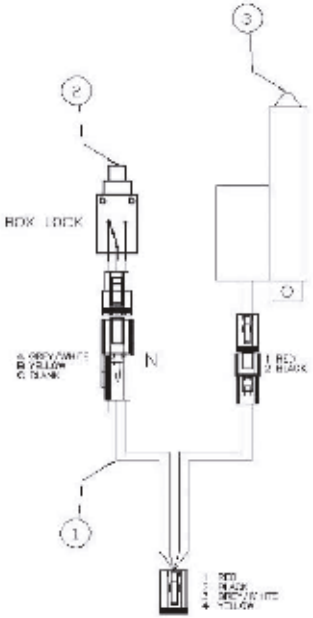

INTERLOCK CONNECTIONS	
WIRES	CONTACT TYPE
[illegible]	NC
[illegible]	NC
[illegible]	NC
[illegible]	NC

BOX LOCK CONNECTIONS	
PLUG	WIRES
1	[illegible]
2	[illegible]
3	[illegible]
4	[illegible]

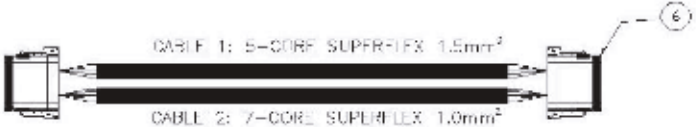

UMBILICAL CONNECTIONS		
PLUG	CABLE 1	CABLE 2
1	1	
2	2	
3		1
4		2
5		3
6		4
7		5
8		6
9		7
10	3	
11	4	
12	[illegible]	

BOX PARTS			
ITEM	QTY	DESCRIPTION / PARTS	PART NO.
[illegible]	[illegible]	[illegible]	[illegible]
[illegible]	[illegible]	[illegible]	[illegible]
[illegible]	[illegible]	[illegible]	[illegible]
[illegible]	[illegible]	[illegible]	[illegible]
[illegible]	[illegible]	[illegible]	[illegible]
[illegible]	[illegible]	[illegible]	[illegible]

GNXA Electrical Layout for Platform

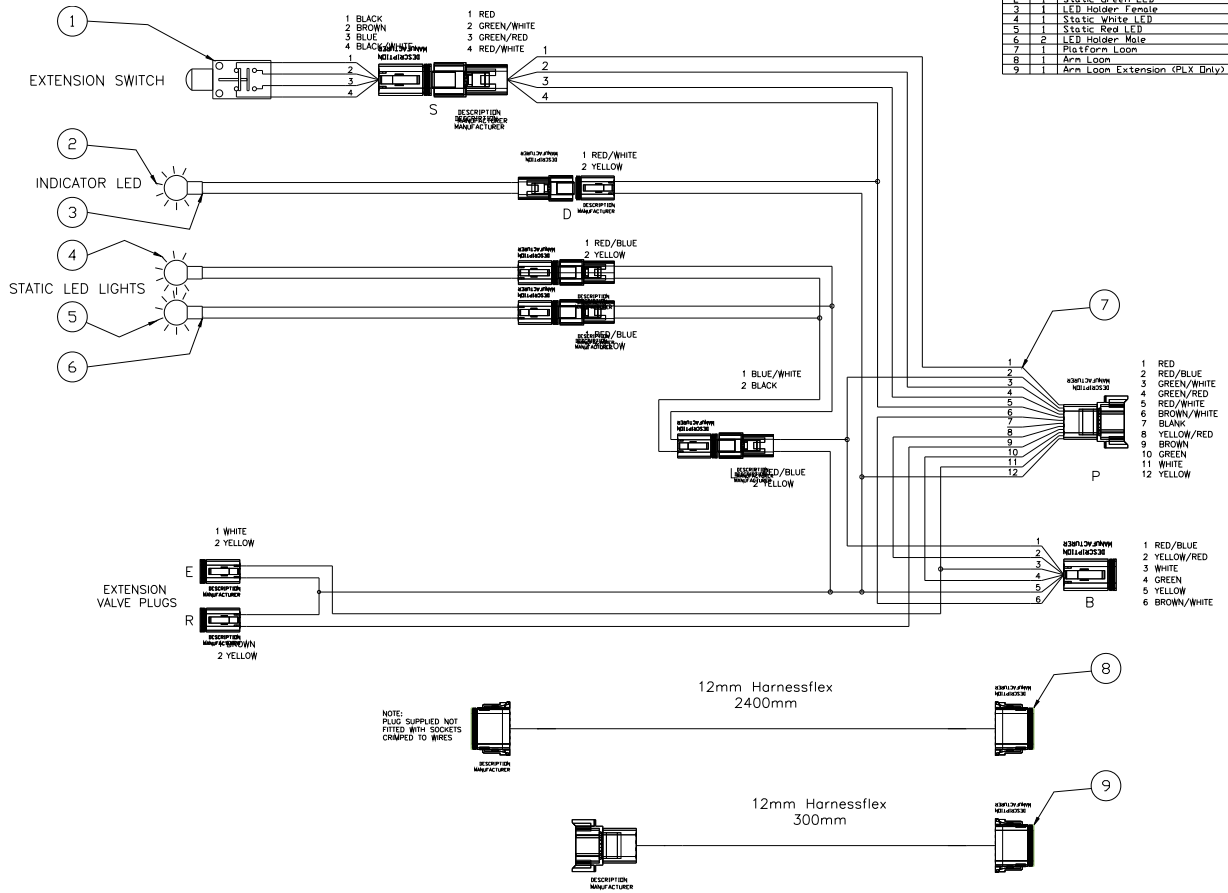

PLATFORM PARTS			
ITEM	QTY	DESCRIPTION	PART NO.
1	1	Extension Switch	GXELCESWWD4011
2	1	Static Green LED	GXELCLEDGD24
3	1	LED Holder Female	ACCELCLHLWD3015-F
4	1	Static White LED	GXELCLEDWD24
5	1	Static Red LED	GXELCLEDRD24
6	2	LED Holder Male	ACCELCLHLWD3015-M
7	1	Platform Loom	GXELCPLTWD4002
8	1	Arm Loom	GXELCARMWD4101
9	1	Arm Loom Extension (PLX Only)	NA

ARM LOOM CONNECTIONS	
PLUG	WIRES
1	RED
2	RED / BLUE
3	GREEN / WHITE
4	GREEN / RED
5	RED / WHITE
6	BROWN / WHITE
7	BLANK
8	YELLOW / RED
9	BROWN
10	GREEN
11	WHITE
12	YELLOW 15

GNXA 'V' Electrical Layout for Platform

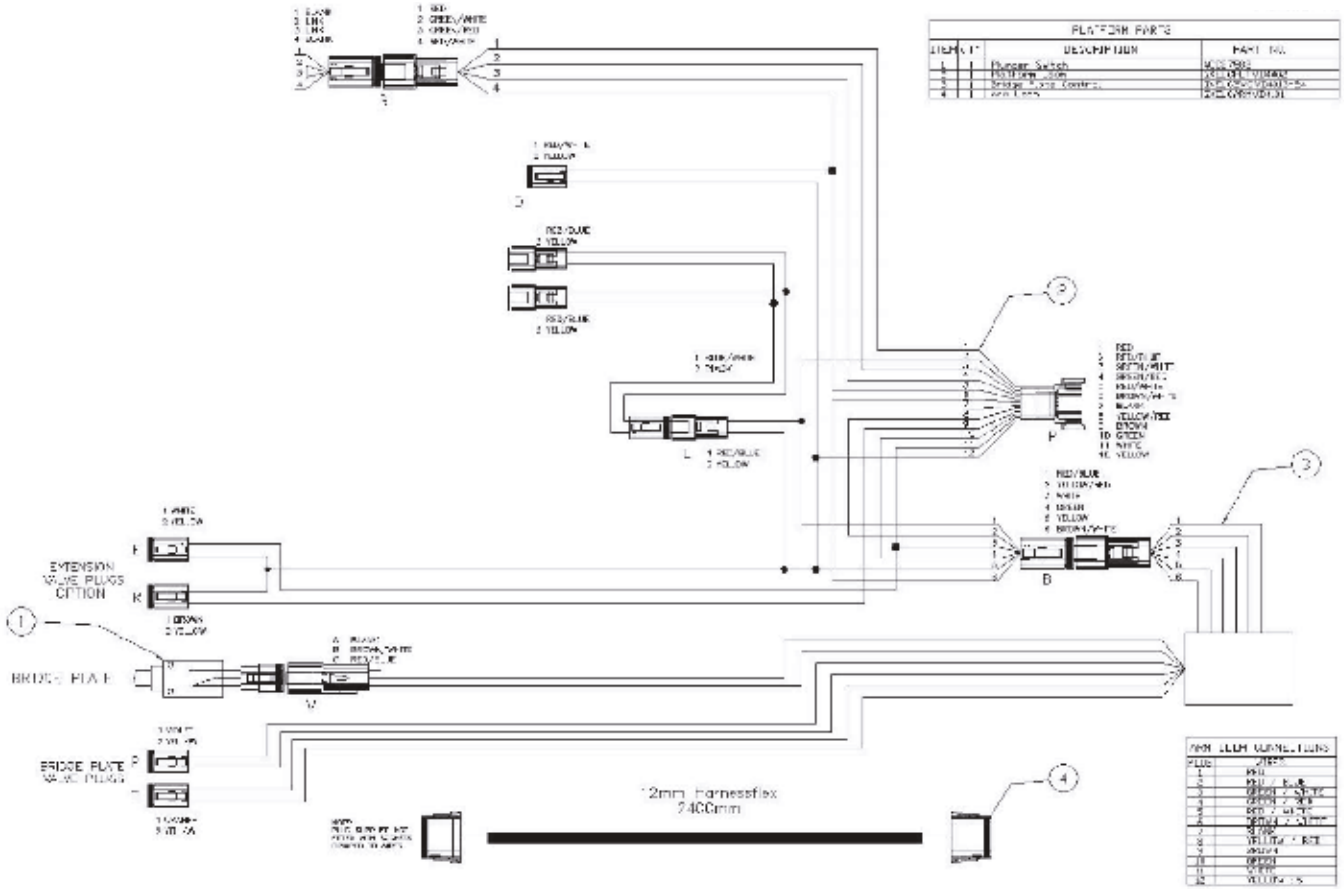

PLATFORM PARTS			
ITEM	QTY	DESCRIPTION	PART NO.
1	1	Plunger Switch	[illegible]
2	1	Platform Joystick	[illegible]
3	1	Bridge Plate Control	[illegible]
4	1	[illegible]	[illegible]

[illegible]	
PLUG	[illegible]
1	RED
2	RED / BLUE
3	GREEN / YELLOW
4	GREEN / RED
5	RED / WHITE
6	BROWN / YELLOW
7	BLACK
8	YELLOW / RED
9	BROWN
10	GREEN
11	WHITE
12	YELLOW / BLUE

GNXA Electrical Layout for Carriage

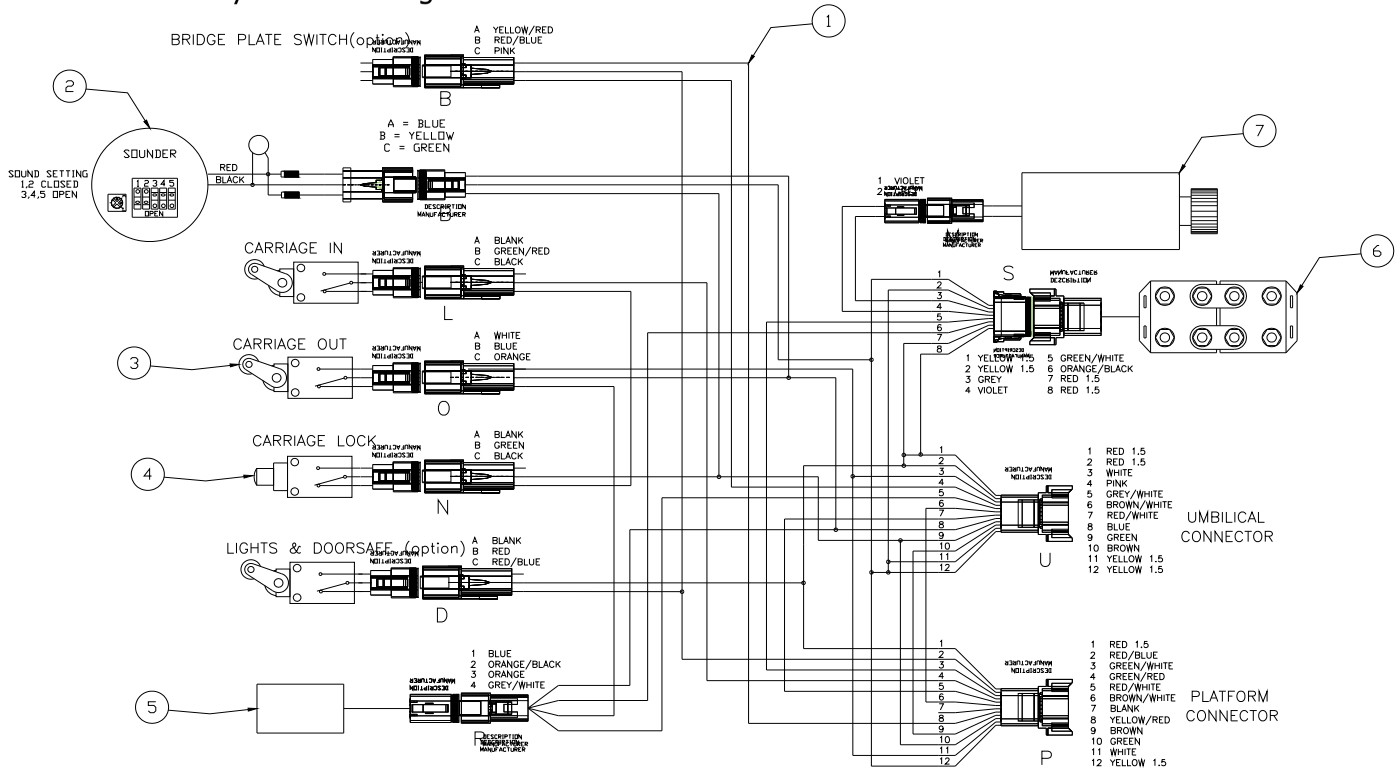

CARRIAGE PARTS			
ITEM	QTY	DESCRIPTION / PARTS	PART NO.
1	1	Carriage Loom	GXAELCCARWD4500
2	1	Sounder	ACC27024
3	3	Roller Lever Switch	ACC27611
4	1	Plunger Switch	ACC27603
5	1	24V Carriage Control Relay	GXELCCCRWD4007-24V
6	1	24V Solenoid Assembly	ACC27466
7	1	24V Motor Assembly	ACCGASMOT24068-24V

GNXA 'V' Electrical Layout for Carriage

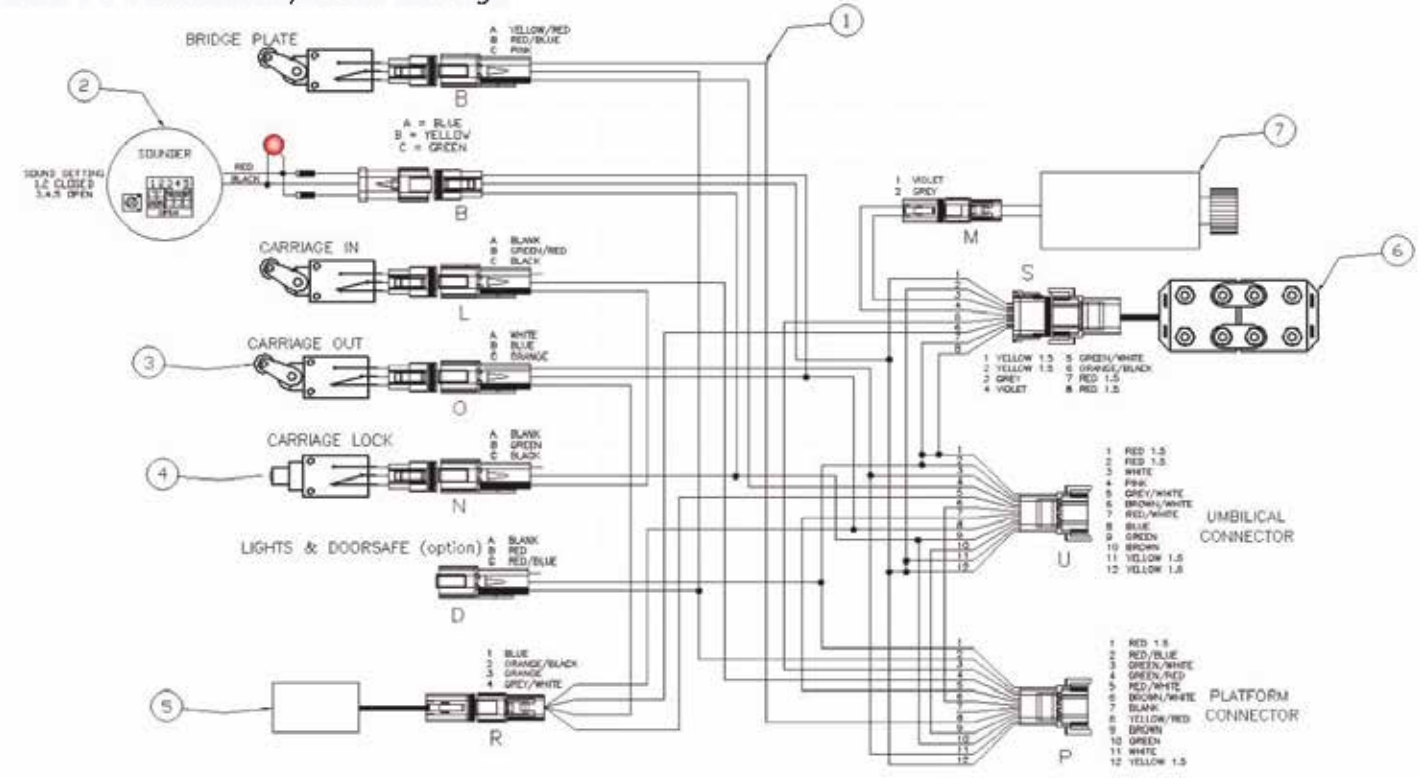

CARRIAGE PARTS			
ITEM	QTY	DESCRIPTION / PARTS	PART NO.
1	1	Carriage Loom	[illegible]
2	1	Sounder	[illegible]
3	3	Roller Lever Switch	[illegible]
4	1	Plunger Switch	[illegible]
5	1	24V Carriage Control Relay	[illegible]
6	1	24V Solenoid Assembly	[illegible]
7	1	24V Motor Assembly	[illegible]

GNXA Electrical Layout for Pump

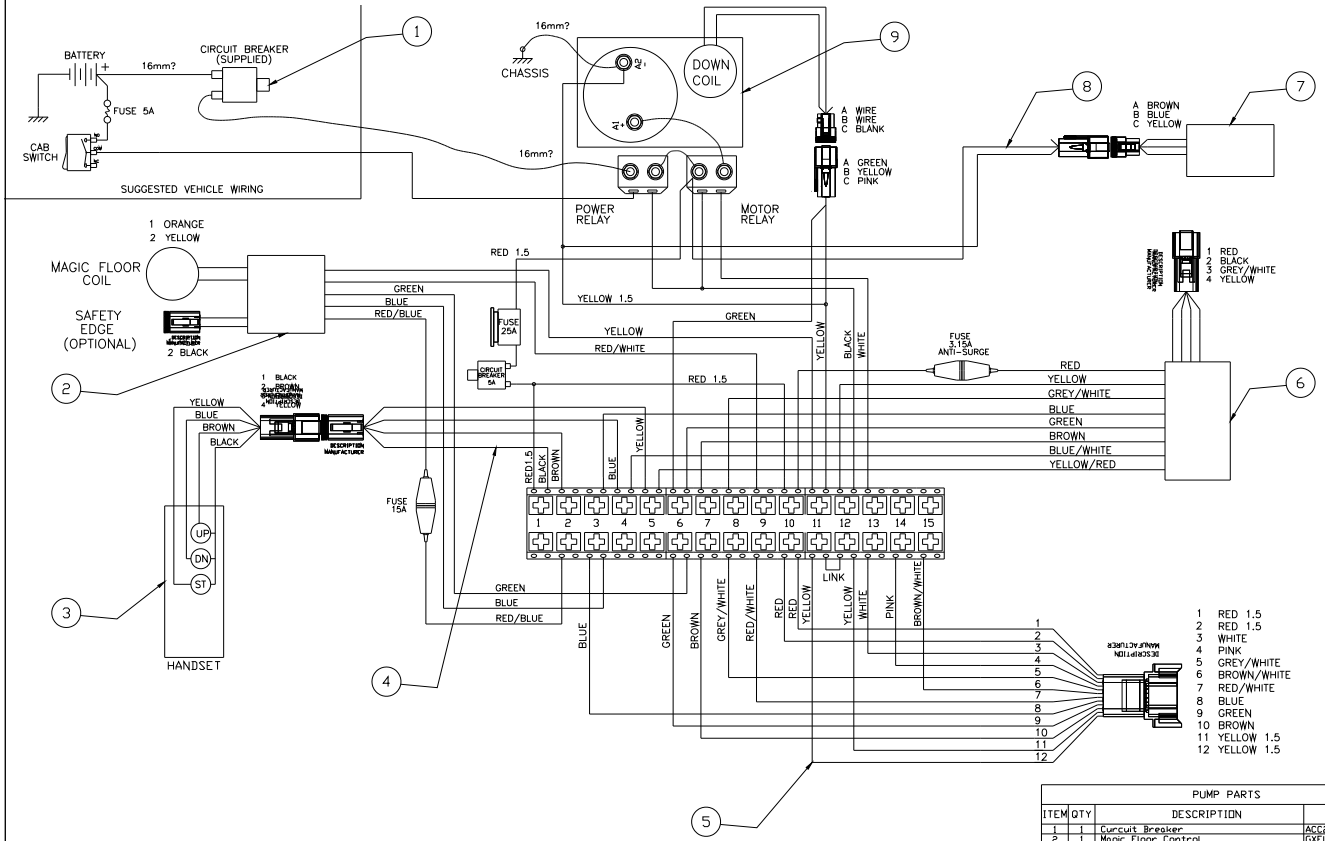

PUMP PARTS			
ITEM	QTY	DESCRIPTION	PART NO.
1	1	Curcuit Breaker	ACC26366
2	1	Magic Floor Control	GXELCFSEWD4125-24V
3	3	Handset	ACC25629
4	1	Pump Loom	GXELCPMPWD4004
5	1	Pump To Umbilical Loom	GXELCPTUWD4009
6	1	Stow And Lock Control	GXELCLCRWD4014-24V
7	1	Sounder (Optional)	GXELCSNDWD4106
8	1	Sounder Loom (Optional)	GXELCPTSWD4015
9	1	24V GNXA Pump Assembly	GXHYDPMP-24V

GNXA 'V' Electrical Layout for Pump

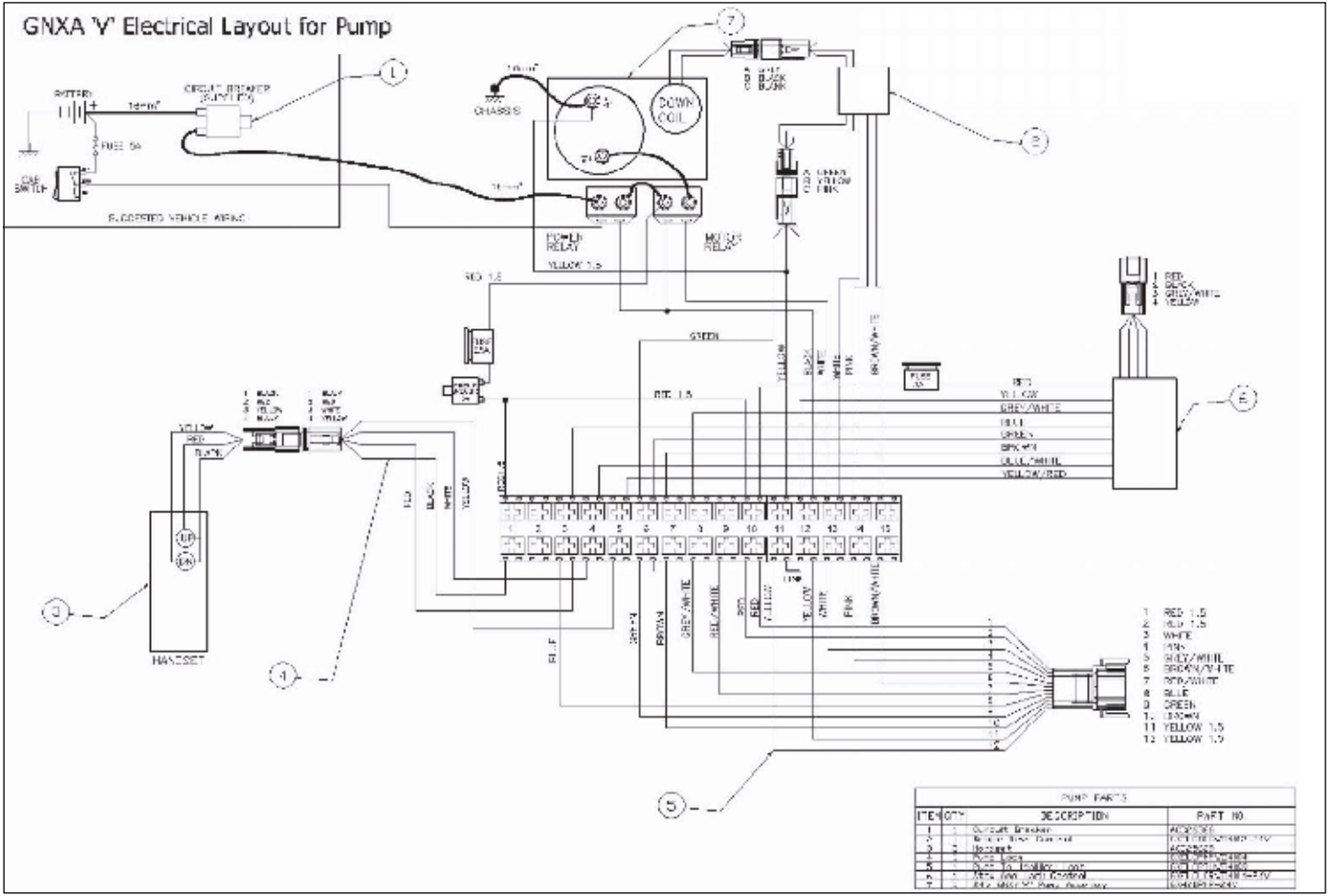

PUMP PARTS			
ITEM	QTY	DESCRIPTION	PART NO.
1	1	Circuit Breaker	[illegible]
2	1	[illegible]	[illegible]
3	1	Handset	[illegible]
4	1	Fuse Block	[illegible]
5	1	Duct to Trailer [illegible]	[illegible]
6	1	[illegible]	[illegible]
7	1	[illegible]	[illegible]

Supplement

Section 5

MAGIC FLOOR LAYOUT

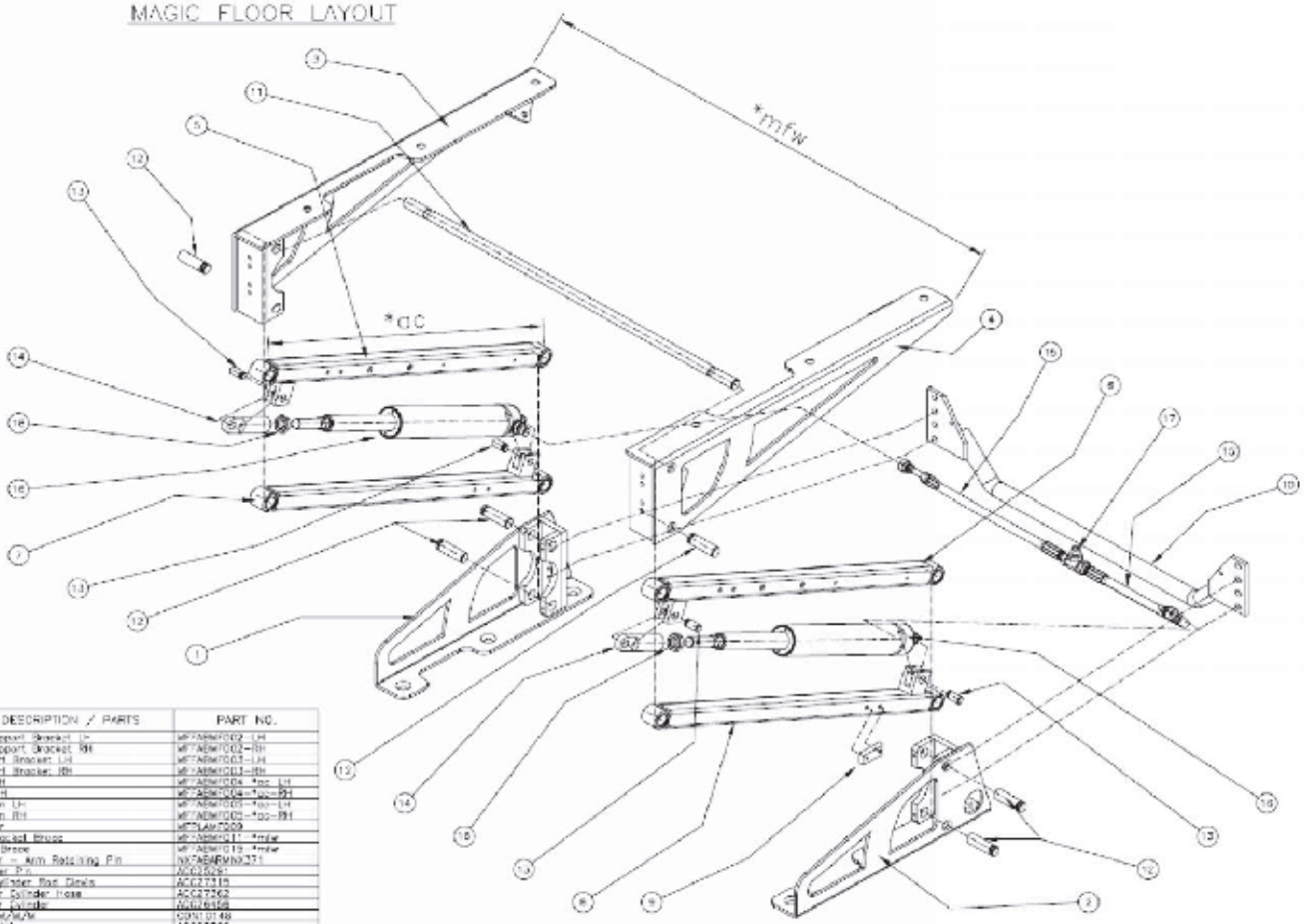

ITEM	DESCRIPTION / PARTS	PART NO.
1	Bottom Support Bracket LH	MFTABMF002-LH
2	Bottom Support Bracket RH	MFTABMF002-RH
3	Top Support Bracket LH	MFTABMF003-LH
4	Top Support Bracket RH	MFTABMF003-RH
5	Top Arm LH	MFTABMF004 *ac LH
6	Top Arm RH	MFTABMF004-*ac-RH
7	Bottom Arm LH	MFTABMF005-*ac-LH
8	Bottom Arm RH	MFTABMF005-*ac-RH
9	Arm Spacer	MFTLAMF009
10	Support Bracket Brace	MFTABMF011 *mfw
11	Arm Pivot Brace	MFTABMF019 *mfw
12	Magic Floor - Arm Retaining Pin	MFTABARMN0271
13	Arm Cylinder Pin	ACC12081
14	Arm LH Cylinder Rod Clevis	ACC27315
15	Magic Floor Cylinder Hose	ACC27262
16	Magic Floor Cylinder	ACC16158
17	1/4" Tee M/M/M	CON10148
18	M16 Hex Nut	ACC24566

*ac - Arm centre in mm, *mfw - Magic Floor width in mm

'Maual Lift Release' Procedure for GNXA PLX, SC & v Lifts

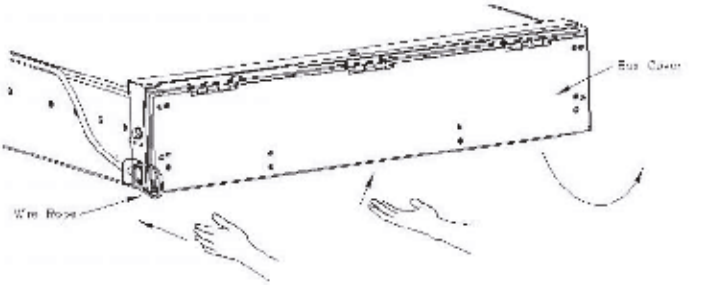

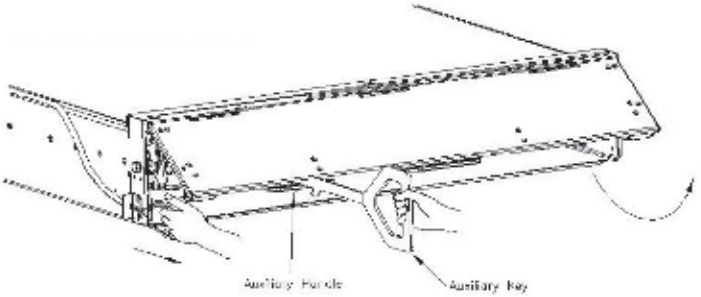

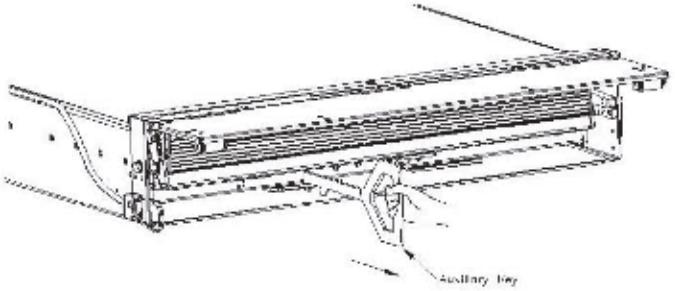

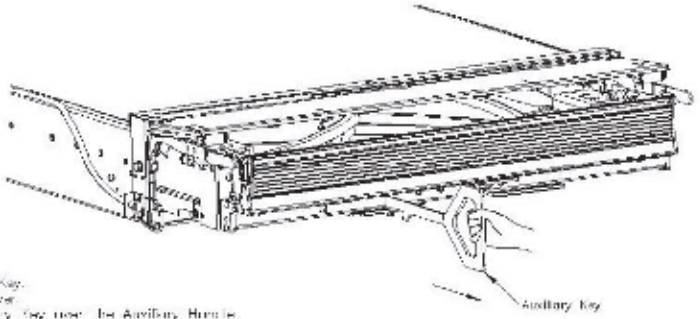

1. Locate Release Key.
2. Lift the Box Cover.
3. Place the Auxiliary Key over the Auxiliary Handle.
4. Pull the Wire Rope to release the Box lock.
5. Pull firmly on the Auxiliary Key, this will enable the Lift to be removed from the Box.

Notes

5

Passenger Lift Solutions Limited
Unit 2, Summit Crescent Ind. Est., Off Roebuck Lane, Smethwick,
West Midlands B66 1BT. U.K.
Tel: +44 (0)121 552 0660 Fax: +44 (0)121 552 0200
E-mail: enquiries@pls-access.co.uk
Web Site: www.passengerliftsolutions.co.uk